Nov. 6, 1962 E. H. KAMISATO 3,061,894

PREFABRICATED WALL

Filed Oct. 14, 1958 4 Sheets-Sheet 1

Fig.1

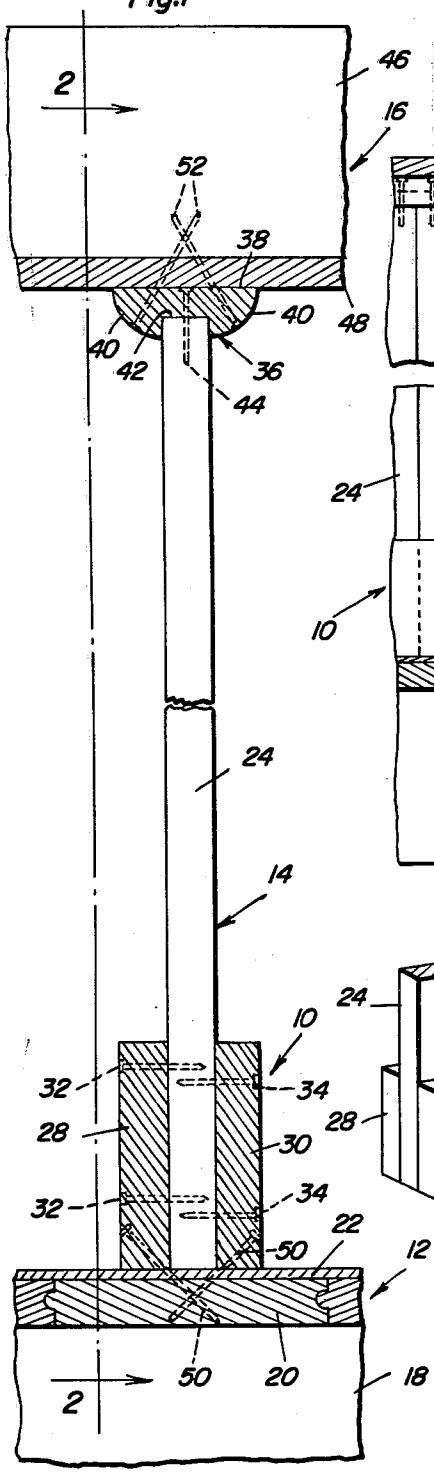

Fig.2

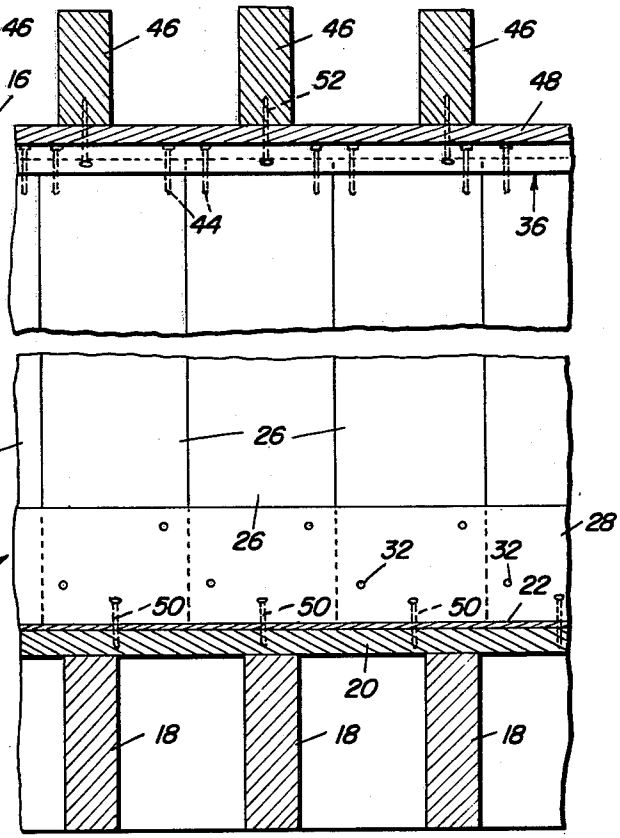

Fig.3

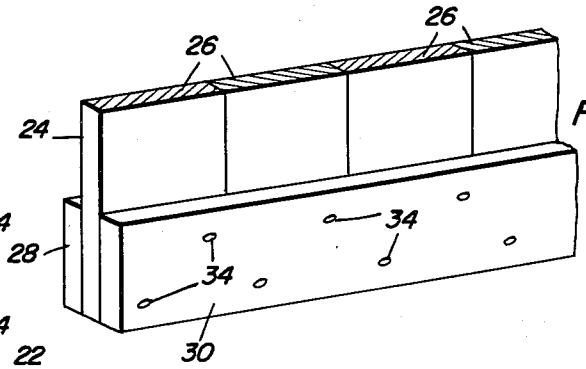

Ernest H. Kamisato
INVENTOR.

BY Clarence A. O'Brien and Harvey B. Jacobson
Attorneys

PREFABRICATED WALL

Filed Oct. 14, 1958 4 Sheets-Sheet 2

Fig.4

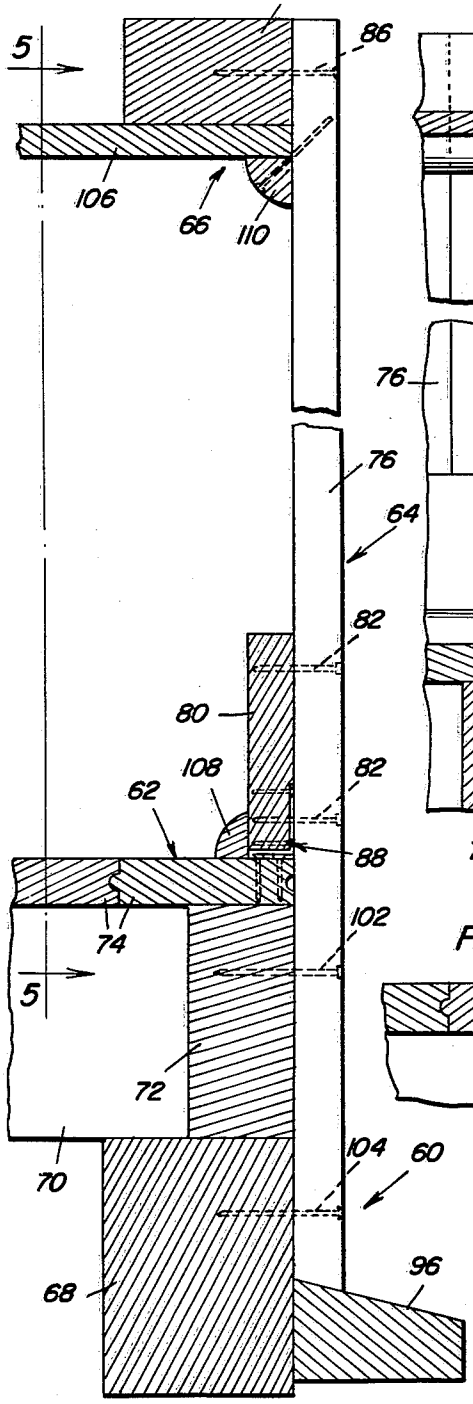

Fig.5

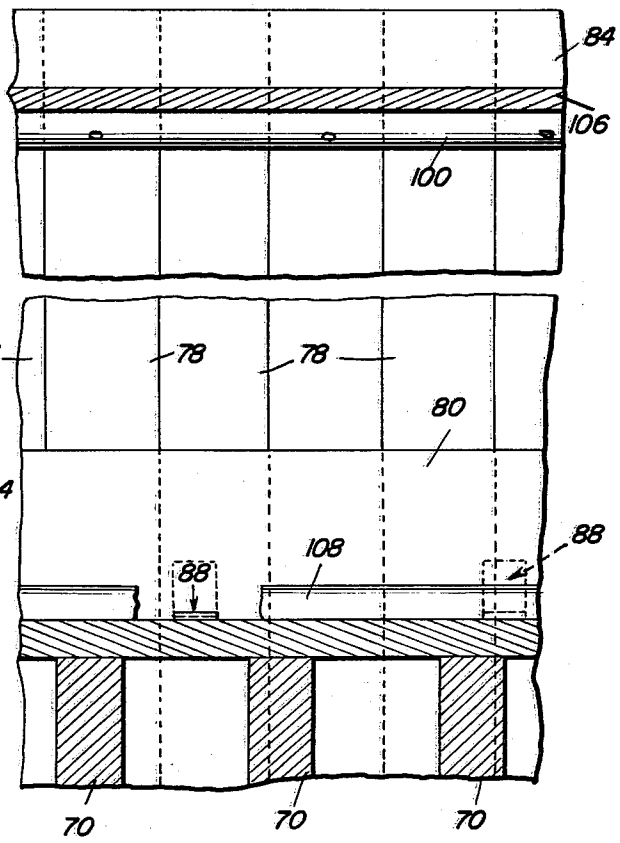

Fig.6

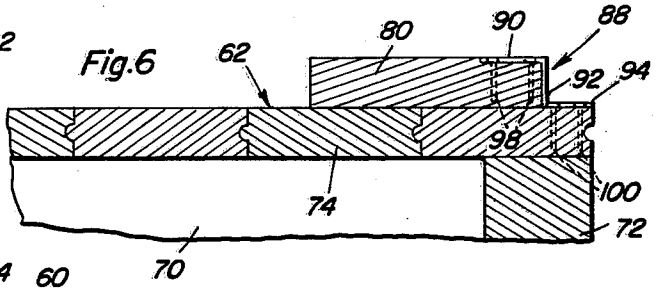

Ernest H. Kamisato
INVENTOR.

BY Clarence A. O'Brien and Harvey B. Jacobson
Attorneys

PREFABRICATED WALL

Filed Oct. 14, 1958 4 Sheets-Sheet 3

Fig.7

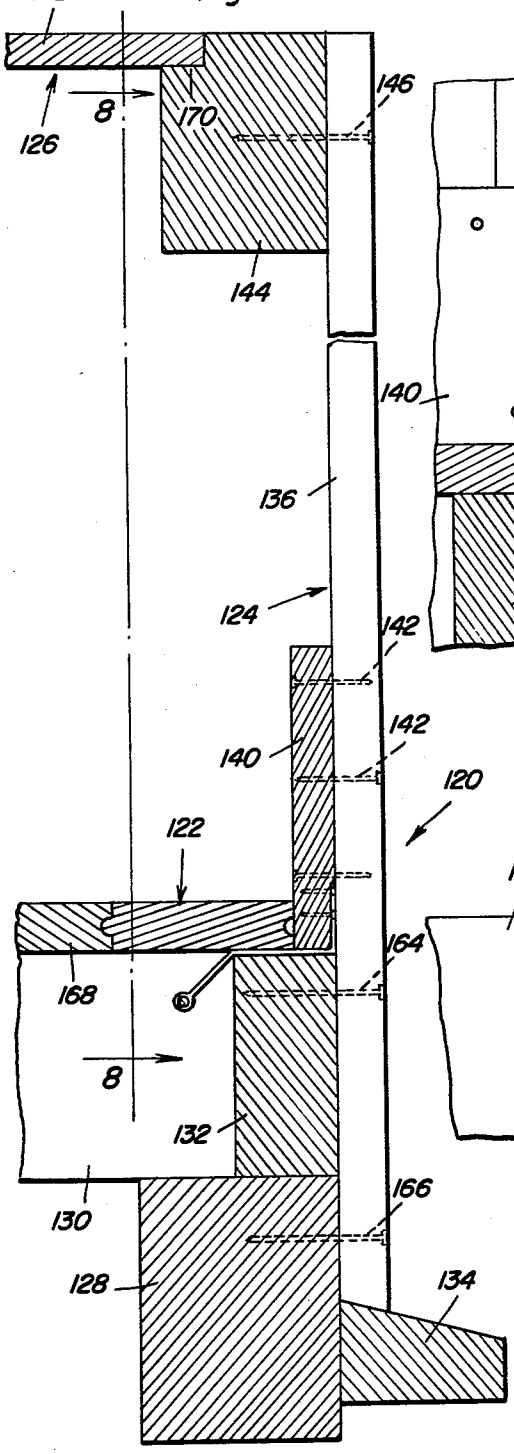

Fig.8

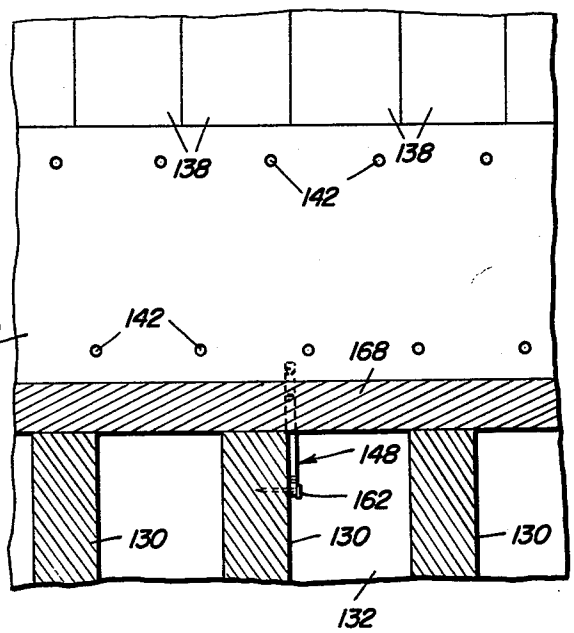

Fig.9

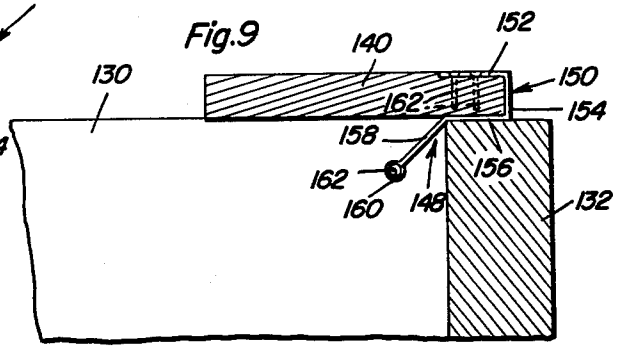

Ernest H. Kamisato
INVENTOR.

BY Clarence A. O'Brien and Harvey B. Jacobson
Attorneys

PREFABRICATED WALL

Filed Oct. 14, 1958 4 Sheets-Sheet 4

Fig.10

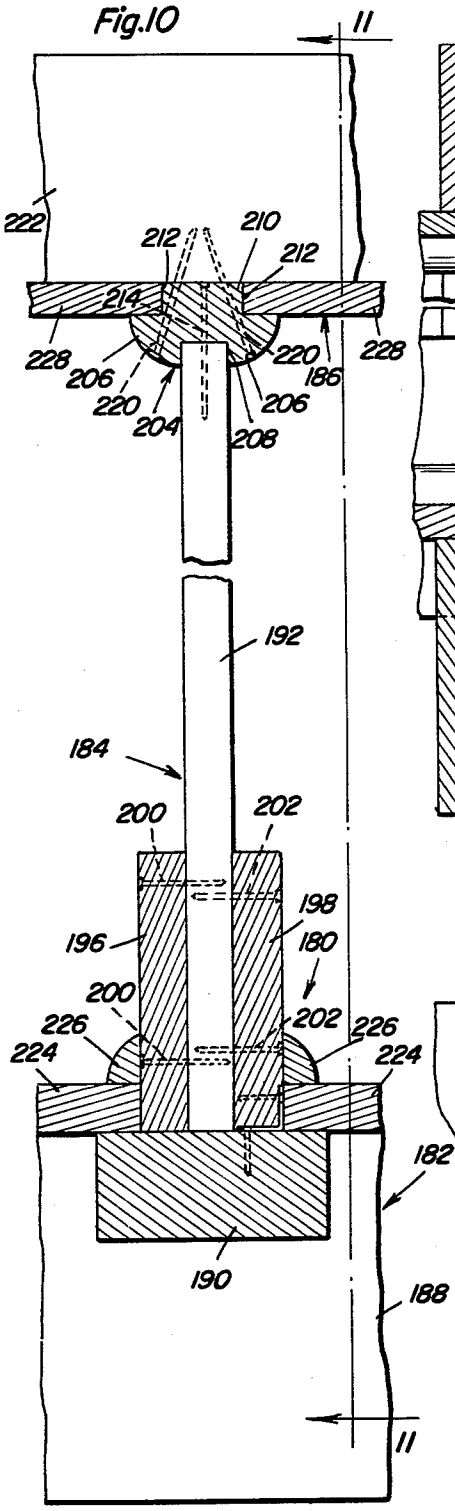

Fig.11

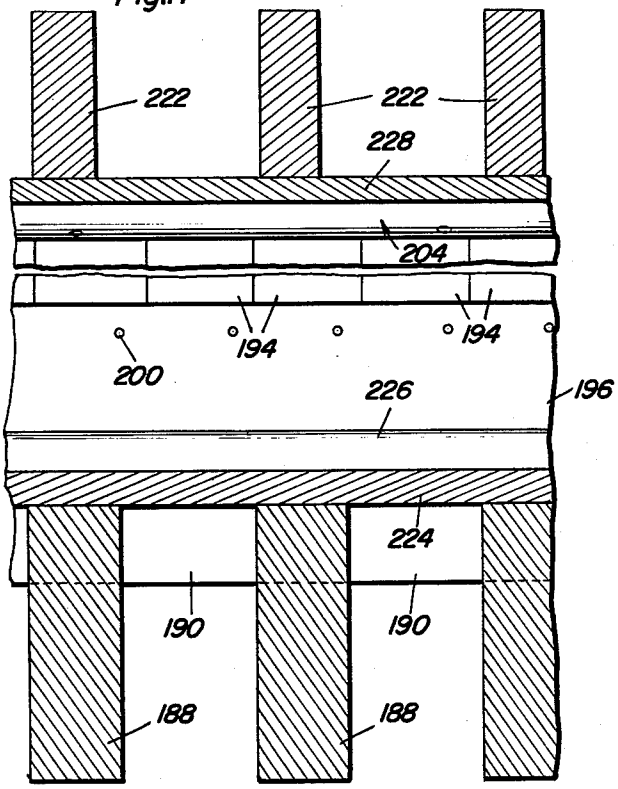

Fig.12

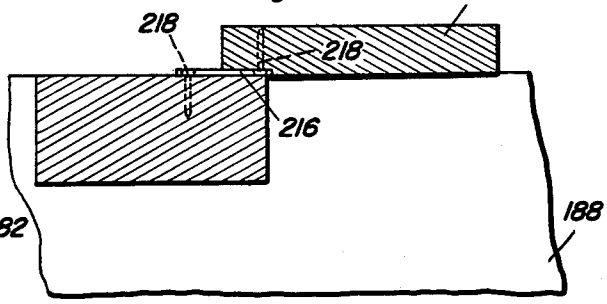

Ernest H. Kamisato
INVENTOR.

BY Clarence A. O'Brien and Harvey B. Jacobson
Attorneys

United States Patent Office

3,061,894

Patented Nov. 6, 1962

1

3,061,894

PREFABRICATED WALL

Ernest H. Kamisato, 45—644 Kionaole Road, Kaneohe, Oahu, Hawaii

Filed Oct. 14, 1958, Ser. No. 767,164
2 Claims. (Cl. 20—4)

This invention relates in general to new and useful improvements in building construction, and more specifically to an improved prefabricated wall construction.

In the formation of buildings in the tropics, and other places where the weather remains warm the year around, it is not necessary that the buildings have double walls. It is therefore the primary object of this invention to provide a wall which may be formed of a plurality of panel members or boards, which wall is secured in assembled condition by other structural elements of the building and which may be readily swung into place after being prefabricated.

Another object of this invention is to provide an improved prefabricated wall construction, the prefabricated wall construction being of such a nature whereby it may be readily anchored with respect to the floor structure of a building and swung from a horizontal position overlying the floor structure to an upright position which it will occupy when forming a wall of the building.

Another object of this invention is to provide an improved method of erecting building walls, the method including the steps of forming the building wall and placing the building wall in overlying relation to the floor structure of a building, securing to the building wall and to the floor structure hinge straps, and turning the building wall into its upright wall forming position with its lower end being restrained by the hinge straps and the hinge straps functioning partially as the means for securing the building wall to the floor structure.

Another object of this invention is to provide an improved hinge strap which may be used for the purpose of securing the building wall to a floor joist with the building wall overlying over the floor joist whereby the building wall may be anchored and swung to a vertical position from a horizontal position and supported on a sill of the floor structure.

Still another object of this invention is to provide an improved prefabricated wall, which wall is formed of a plurality of elongated panel members or boards which have the lower portions thereof secured together by a base board member and the upper portions thereof secured together by a ceiling supporting member whereby the individual panel members of the panel are secured together by elements which have a further function in the building construction.

A further object of this invention is to provide an improved prefabricated interior partition wall, the prefabricated interior partition wall being formed of a plurality of panel members or boards disposed in edge abutting relation, the lower ends of the panel members being secured together by baseboards disposed on opposite sides thereof and their upper ends being secured together by a ceiling supporting member.

A still further object of this invention is to provide an improved partition wall construction which includes a panel wall having secured to opposite sides of the base thereof baseboards and having secured to the upper edge thereof in overlying relation a ceiling supporting member, the ceiling supporting member having molding defined portions disposed on opposite sides of the panel wall and below the ceiling whereby once the partition wall has been erected and the ceiling put into place, the partition wall is finished.

These together with other objects and advantages which

2

will become subsequently apparent reside in the details of construction and operation as more fully hereinafter described and claimed, reference being had to the accompanying drawings forming a part hereof, wherein like numerals refer to like parts throughout, and in which:

FIGURE 1 is a vertical sectional view taken through a building incorporating one form of prefabricated interior partition wall, the view being taken through the partition wall with portions thereof being shown in section, the intermediate portion of the partition wall being omitted;

FIGURE 2 is a fragmentary vertical sectional view taken substantially upon the plane indicated by the section line 2—2 of FIGURE 1 and shows further the details of the partition wall;

FIGURE 3 is a fragmentary perspective view on a reduced scale taken through the lower portion of the partition wall and shows the detail of construction thereof;

FIGURE 4 is a vertical sectional view taken through an outer part of the building of FIGURE 1 and shows the details of an exterior wall thereof, an intermediate portion of the exterior wall being omitted;

FIGURE 5 is a fragmentary vertical sectional view taken substantially upon the plane indicated by the section line 5—5 of FIGURE 4 and on a small scale, the view showing details of the exterior wall;

FIGURE 6 is a fragmentary sectional view similar to FIGURE 4 and shows the baseboard of the exterior wall secured to the floor structure by the hinge straps;

FIGURE 7 is a fragmentary vertical sectional view taken through a modified form of exterior wall and shows the specific details thereof, including the details of a hinge strap securing the exterior wall to a floor joist, intermediate portion of the exterior wall being omitted;

FIGURE 8 is an enlarged fragmentary sectional view taken substantially upon a plane indicated by the section line 8—8 of FIGURE 7 and shows further the construction of the lower portion of the exterior wall;

FIGURE 9 is a fragmentary sectional view similar to FIGURE 7 and shows the relationship of the baseboard of the exterior wall and the hinge strap prior to the erection of the exterior wall;

FIGURE 10 is a fragmentary sectional view taken through the interior of the building and shows a modified form of partition wall, an intermediate portion of the partition wall being omitted;

FIGURE 11 is a fragmentary vertical sectional view on a reduced scale taken substantially upon the plane indicated by the section line 11—11 of FIGURE 10 and shows further the details of the partition wall; and

FIGURE 12 is a fragmentary sectional view similar to FIGURE 10 and shows a baseboard of the partition wall secured to the floor structure prior to the erection of the partition wall.

Referring now to the drawings in detail, it will be seen that there is illustrated in FIGURES 1, 2 and 3 a building construction which is referred to in general by the reference numeral **10**. The building construction **10** includes a floor structure which is referred to in general by the reference numeral **12**, a partition wall which is referred to in general by the reference numeral **14**, and a ceiling structure which is referred to in general by the reference numeral **16**.

The floor structure **12** is of a conventional type and includes floor joists **18** which are disposed in spaced parallel relation and which have secured thereto in overlying relation flooring **20**. If desired, a suitable floor covering, such as "Masonite" or the like may overlie the flooring **20**. The floor covering is referred to by the reference numeral **22**.

The partition wall **14** includes a wall panel **24**. The wall panel **24** may be of any construction, but is pref-

erably formed of a plurality of elongated panel members **26** which may be in the form of boards. The panel members **26** are disposed in flat edge abutting relation and have their lower portions secured together by mounting baseboards **28** and **30** disposed on opposite sides thereof. The baseboard **28** is secured to the panel members **26** by means of a plurality of nails **32**. Similar nails **34** secure the baseboard **30** to the panel members **26**.

The upper ends of the panel members **26** are also secured together by a ceiling engaging and supporting member which is referred to in general by the reference numeral **36**. The member **36** is initially generally rectangular in outline and is milled to provide an upper surface **38**, a pair of lower molding defining surfaces **40** and a centrally disposed recess **42**. The upper ends of the panel members **26** are seated in the recess and the member **36** secured to the panel members **26** by use of nails **44**.

The ceiling construction **16** is of a conventional type and includes ceiling joists **46** which are disposed in spaced parallel relation. Secured to the ceiling joists **46** is a ceiling board **48**.

The partition wall **14** is of a height to extend between the floor covering **22** and the underside of the ceiling board **48**. The partition wall **14** is prefabricated at a site remote from the building site and is transported into place. It is then erected in its vertical position after which it is secured in place by means of nails **50** which are preferably driven in diagonal relation down through the lower portions of the baseboards **28** and **30**, through the flooring **20**, as is best shown in FIGURES 1 and 2. The upper surface **38** of the member **40** abuts the ceiling board **48** in a supporting position and the member **36** is secured to the ceiling joists **46** by means of nails **52** which are driven diagonally upwardly through the molding defining portions **40**, through the ceiling board **48** and into the ceiling joists **46**, as is best shown in FIGURES 1 and 2.

Referring now to FIGURES 4, 5 and 6, it will be seen that there is illustrated a second form of building construction which is referred to in general by the reference numeral **60**. The building construction **60** includes a floor structure **62**, an exterior wall **64** and a ceiling structure **66**.

The floor structure **62** includes a frame member **68** on which there are seated ends of floor joists **70**. Also seated on the frame member **68** is a floor sill **72**. Overlying the floor joists **70** and the floor sill **72** is flooring **74**.

The exterior wall **64** is of a prefabricated construction and includes a wall panel **76** which is formed of a plurality of panel members **78** which may be in the form of boards. The panel members **78** are secured together intermediate their ends by means of a mounting baseboard **80**. The panel members **78** are secured to the baseboard **80** by nails **82**. The panel members **78** are also secured together adjacent their upper ends by means of a longitudinal frame member **84** which also functions as a ceiling support. The frame member **84** is secured to the panel **78** by means of nails **86**.

In the erection of the prefabricated wall **64**, there is secured to the baseboard **80** at spaced intervals hinge straps which are referred to in general by the reference numeral **88**. Each of the hinge straps **88** is Z-shaped in cross-section and includes an end flange **90**, an intermediate flange **92** and an end flange **94**.

In the erection of the exterior wall **64**, the floor structure **62** is completed including a drip plate **96** secured to the frame member **68**, as is best shown in FIGURE 4. The baseboard **80** is then laid on the flooring **74** adjacent the edge thereof in the position best shown in FIGURE 6. The hinge strap **88** is then positioned with respect to the baseboard **80**, as shown in FIGURE 6, with the end flange **90** overlying a lower part of the baseboard **80**. The end flange **90** is then secured to the baseboard **80** by means of nails **98** with the intermediate flange **92** engaging the lower edge of the baseboard **80**. The end flange **94** is then secured to the flooring **74** by nails **100**. This having been completed, the remainder of the exterior wall **64** is secured to the baseboard **80**.

Once the exterior wall **64** has been prefabricated being secured in assembled condition to the mounting baseboard **80** and is lying on the floor structure **62**, it is then erected by swinging upwardly and outwardly. The hinge straps **88** restrain the movement of the baseboard portion of the exterior wall **64** and as a result the exterior wall **64** swings into the position illustrated in FIGURE 4. It is then secured in place by means of nails **102** and **104** which are driven through the panel members **78** and into the sill **72** and the frame member **68**, as is best shown in FIGURE 4.

The ceiling structure **66** is formed primarily of ceiling board **106**. The ceiling board **106** is now secured in place on the underside of the member **84**.

The exterior wall **64** is next completed by placing an intersection of the flooring **74** and baseboard **80** a molding **108**. A similar molding **110** is secured at the intersection of the ceiling board **106** and the wall panel **76**.

Referring now to FIGURES 7, 8 and 9, it will be seen that there is illustrated another form of building construction which is referred to in general by the reference numeral **120**. The building construction **120** includes a floor structure **122**, an exterior wall **124** and a ceiling structure **126**.

In the erection of the building construction **120**, only a portion of the floor structure **122** is erected. This portion includes a frame **128**, floor joists **130** and a sill **132**. If desired, a drip plate **134** may also be installed. After this much of the floor structure **122** has been erected, the exterior wall **124** is erected.

The exterior wall **124** includes a wall panel **136** which is preferably formed of a plurality of panel members **138** which may be in the form of boards. The intermediate portion of the individual panel members are connected to a mounting baseboard **140** by means of nails **142** which serve to retain the panel members **138** in flat edge abutting relation. The upper ends of the panel members **138** are also secured together by means of a frame member **144** which also functions as a ceiling support. The panel members **138** are secured to the frame member **144** by nails **146**.

In the erection of the exterior wall **124**, there are first secured to the baseboard **140** a plurality of hinge straps which are referred to in general by the reference numeral **148**. Each of the hinge straps **148** includes a generally C-shaped portion **150** which includes an upper flange **152**, an intermediate flange **154** and a lower flange **156**. Integrally connected to the lower flange **156** and sloping downwardly and away therefrom is a diagonal flange **158** which terminates in an eye **160**, the eye **160** being disposed parallel to the planes of the flanges. The C-shaped end portion **150** is slipped over the lower edge of the baseboard **140** with the baseboard **140** being disposed in a horizontal position. The flange **152** is secured to the baseboard **140** by means of nails **162**.

It is to be understood that the spacing of the hinge straps **148** is such that each hinge strap **148** is disposed adjacent one of the floor joists **130**. With the baseboard **140** lying along the floor joists **130**, as is best shown in FIGURE 9, the hinge strap **148** is secured to the floor joists **130** by driving nails **162** through the eyes **160** thereof. After the baseboard **140** has been so secured in place, the remainder of the exterior wall **124** is secured thereto.

Once the exterior wall **124** has been completed, it is swung upwardly to its vertical position of FIGURE 7. When in this position, it is secured in place by means of nails **164** and **166** which extend through the panel members **138** into the sill **132** and the frame member **128**, respectively.

After the exterior wall **124** has been installed, the

flooring 158 is secured in overlying relation to the floor joists 130 to complete the floor structure 122.

The frame member 144 is provided in the inner upper corner thereof with a recess 170. The recess 170 receives celling boards 172 which form the ceiling structure 126. The frame member 144 also functions as a molding between the ceiling boards 172 and the exterior wall 124.

Referring now to FIGURES 10, 11 and 12 in particular, it will be seen that there is illustrated a fourth form of building construction which is referred to in general by the reference numeral 180. The building construction 180 includes a floor structure 182, a partition wall 184 and a ceiling structure 186.

The floor structure 182 includes a plurality of floor joists 188. Extending between the floor joists 188 in alignment with the partition wall 184 are frame members 190. If desired, the frame members 190 may be formed in one-piece and the floor joist 188 notched to receive it.

The partition wall 184 includes a wall panel 192 which is formed of a plurality of panel members 194 which may be in the form of boards. The panel members 192 have the lower ends thereof secured together with panel members in edge abutting relation by means of a pair of mounting baseboards 196 and 198 disposed on opposite sides thereof. The baseboard 196 is secured to the panel members 194 by means of nails 200 and the baseboard 198 is secured to the panel members 194 by means of nails 202.

The upper ends of the panel members 194 are also secured together by a member 204. The members 204 serve to secure the panel members 194 together, to support a portion of the ceiling structure 186 and to form a molding. The member 204 includes downwardly projecting molding defining portions 206 disposed on opposite sides of a notch 208 receiving the upper ends of the panel members 194. The member 204 also includes an upper portion 210 which has disposed on opposite sides thereof notches 212. A member 204 is secured to the panel members 194 by means of nails 214.

After the floor joists 188 and the frame member 190 has been installed, the baseboard 198 is laid on the floor joists 188. Prior to the positioning of the baseboard 198 on the floor joists 188, there is secured at the lower part thereof at spaced intervals hinge straps 216, which end straps are straight and flat. The hinge straps 216 are secured to the baseboard 198 by means of nails 218. The hinge straps 216 are also secured to the frame member 190 by means of nails 218.

Once the baseboard 198 has been secured to the floor structure 182 by means of the hinge straps 216, the remainder of the remainder of the partition wall 184 is secured thereto. The partition wall 184 is then swung up to the vertical position of FIGURE 10. It is then secured in this position by nails 220 driven diagonally through the member 204 up into ceiling joists 222 which form part of the ceiling structure 186.

After the partition wall 184 has been erected, flooring 224 is secured in overlying relation to the floor joists on opposite sides of the baseboards 196 and 198. If desired, molding 226 may be secured at the intersections of the flooring 224 and the baseboards 196 and 198.

Finally the ceiling structure 186 is completed by securing the ceiling boards 228 in place. It is to be noted that the ceiling boards 228 have the edges thereof seated in the notches 212.

From the foregoing, it will be readily apparent that there has been devised several forms of prefabricated partition walls which may be easily constructed and which are of such a structure whereby the cost thereof is very low. Furthermore, there have been devised means for erecting the prefabricated walls by swinging them upwardly with the lower ends thereof anchored to the floor structure so that once the prefabricated walls are in vertical position, they are in their final position. In addition to this, the building construction of this invention is of such a nature whereby the prefabricated walls, either interior or exterior, may be erected either before or after the flooring is installed.

The foregoing is considered as illustrative only of the principles of the invention. Further, since numerous modifications and changes will readily occur to those skilled in the art, it is not desired to limit the invention to the exact construction and operation shown and described, and accordingly all suitable modifications and equivalents may be resorted to, falling within the scope of the invention as claimed.

What is claimed as new is as follows:

1. A prefabricated wall comprising a wall panel loosely consisting of abutting panel sections interconnected by a ceiling support member, a baseboard secured to one side of said wall panels for holding said panel sections in assembled relation, and hinge straps secured to and embedded in said baseboard between said one side of the wall panel and said baseboard and projecting therefrom for securement to a floor structure whereby said wall panel may be swung from a horizontal position lying on said floor structure to a vertical position in which the hinge strap is hidden, each hinge strap having an eye remote from said baseboard with said eye having an axis parallel to said baseboard whereby a nail may be driven horizontally through said eye to secure said eye to a floor joist of said floor structure.

2. The construction of claim 1 wherein each hinge strap initially has a C-shaped portion remote from said eye extending about a lower edge of said baseboard.

References Cited in the file of this patent

UNITED STATES PATENTS

414,976	Harvey	Nov. 12, 1889
477,757	Howe	June 28, 1892
1,486,541	Ottosson-Elliot et al.	Mar. 11, 1924
2,116,900	Klicka	May 10, 1938
2,261,640	Bishop	Nov. 4, 1941
2,702,413	Kamisato	Feb. 22, 1955
2,787,812	Long	Apr. 9, 1957
2,815,542	Baker	Dec. 10, 1957
2,836,054	Brauer	May 27, 1958

FOREIGN PATENTS

791,717	Great Britain	Mar. 12, 1958

OTHER REFERENCES

Construction Methods and Equipment, May 1956, pp. 52–54.