US008161152B2

(12) **United States Patent**
Ogielski et al.

(10) **Patent No.: US 8,161,152 B2**
(45) **Date of Patent: Apr. 17, 2012**

(54) **METHODS AND SYSTEMS FOR MONITORING NETWORK ROUTING**

(75) Inventors: **Andrew T. Ogielski**, Etna, NH (US); **James H. Cowie**, Deering, NH (US)

(73) Assignee: **Renesys Corporation**, Manchester, NH (US)

(*) Notice: Subject to any disclaimer, the term of this patent is extended or adjusted under 35 U.S.C. 154(b) by 1067 days.

(21) Appl. No.: **10/803,767**

(22) Filed: **Mar. 18, 2004**

(65) **Prior Publication Data**

US 2004/0221296 A1 Nov. 4, 2004

Related U.S. Application Data

(60) Provisional application No. 60/455,722, filed on Mar. 18, 2003.

(51) **Int. Cl.**
G06F 15/173 (2006.01)

(52) **U.S. Cl.** **709/224**

(58) **Field of Classification Search** ..... None
See application file for complete search history.

(56) **References Cited**

U.S. PATENT DOCUMENTS

6,173,324	B1 *	1/2001	D'Souza	709/224
6,182,224	B1 *	1/2001	Phillips et al.	726/6
6,188,936	B1	2/2001	Maguire et al.	
6,392,997	B1 *	5/2002	Chen	370/252
6,418,467	B1 *	7/2002	Schweitzer et al.	709/223
6,430,595	B1	8/2002	Ferguson et al.	
6,510,434	B1 *	1/2003	Anderson et al.	707/100
6,687,873	B1 *	2/2004	Ballantyne et al.	715/215
6,836,800	B1 *	12/2004	Sweet et al.	709/224
6,947,963	B1 *	9/2005	Agarwal et al.	709/201
6,968,393	B1 *	11/2005	Chen et al.	709/242
7,080,161	B2 *	7/2006	Leddy et al.	709/250
7,349,994	B2 *	3/2008	Balonado et al.	709/250
2001/0013107	A1 *	8/2001	Lewis	714/47
2002/0133584	A1 *	9/2002	Greuel et al.	709/224
2002/0184393	A1 *	12/2002	Leddy et al.	709/250
2003/0004853	A1 *	1/2003	Ram et al.	705/37

(Continued)

FOREIGN PATENT DOCUMENTS

WO WO-01/86444 A1 11/2001

(Continued)

OTHER PUBLICATIONS

"Renesys Corporation", web.archive.org/web/20011129120825/http://renesys.com/.*

(Continued)

Primary Examiner — Ario Etienne
Assistant Examiner — Clayton R Williams
(74) *Attorney, Agent, or Firm* — Goodwin Procter LLP

(57) **ABSTRACT**

The disclosed methods and systems include collecting routing data from a plurality of network routers, and correlating the routing data across routers and across time to obtain network data. The network data can be streamed to a user in real-time and the user can interactively query the data. In one embodiment, interactive routing analyses, drill-down, and forensics can be performed using a repository of Border Gateway Protocol (BGP) update traffic. Alarms can be set to detect selected routing problems. In setting the alarms, the message data for each router can be processed in timestamp order. Current message data from each router can be compared with previous message data to determine a condition status. An alarm can be provided when the condition status meets a temporal correlation criterion and/or a spatial correlation criterion.

12 Claims, 8 Drawing Sheets

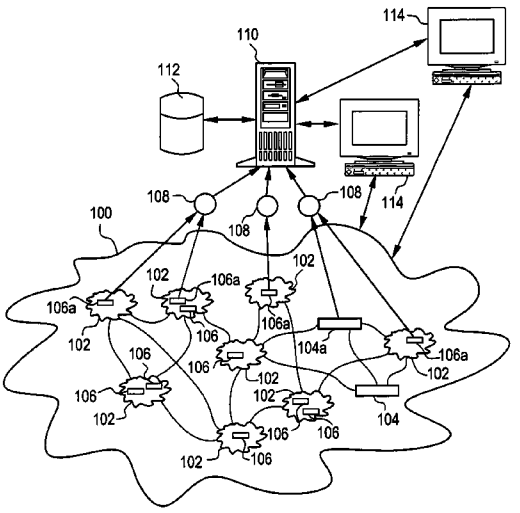

U.S. PATENT DOCUMENTS

2003/0037136	A1	2/2003	Labovitz et al.	
2003/0105850	A1	6/2003	Lean et al.	
2003/0120769	A1 *	6/2003	McCollom et al.	709/224
2003/0142682	A1	7/2003	Bressoud et al.	
2004/0010584	A1 *	1/2004	Peterson et al.	709/224
2004/0015908	A1 *	1/2004	Giel et al.	717/141
2004/0024845	A1 *	2/2004	Fishhaut et al.	709/219
2004/0114518	A1 *	6/2004	MacFaden et al.	370/230.1
2004/0168100	A1	8/2004	Thottan et al.	
2004/0240385	A1	12/2004	Boggs et al.	

FOREIGN PATENT DOCUMENTS

WO	WO-03/003210	A2	1/2003

OTHER PUBLICATIONS

"GRADUS: Global Routing Analysis Database at renesys.com", web.archive.org/web/20011212094527/gradus.renesys.com/.*

"Packet Design's Route Explorer Will Provide View into World's Fastest Network' at SC2002 Conference", Nov. 18, 2002, Business Wire, pp. 1-3.*

"Route Explorer" Visually Diagnose and Analyze Your IP Network, as captured and archived on Sep. 25, 2002, p. 1.*

Akashi, O. et al., "Multiagent-based Cooperative Inter-AS Diagnosis in ENCORE," *IEEE/IFIP, Network Operations and Management Symposium*, pp. 521-534 (2000).

Wu, Peng et al., "Alarm Correlation Engine (ACE)," *IEEE, Network Operations and Management Symposium, NOMS* '98, vol. 3:733-742 (1998).

Supplementary European Search Report for Application No. 04757600, dated Mar. 30, 2009.

Canadian Search Report for Application No. 2,519,378, dated Sep. 25, 2008.

* cited by examiner

FIG. 1

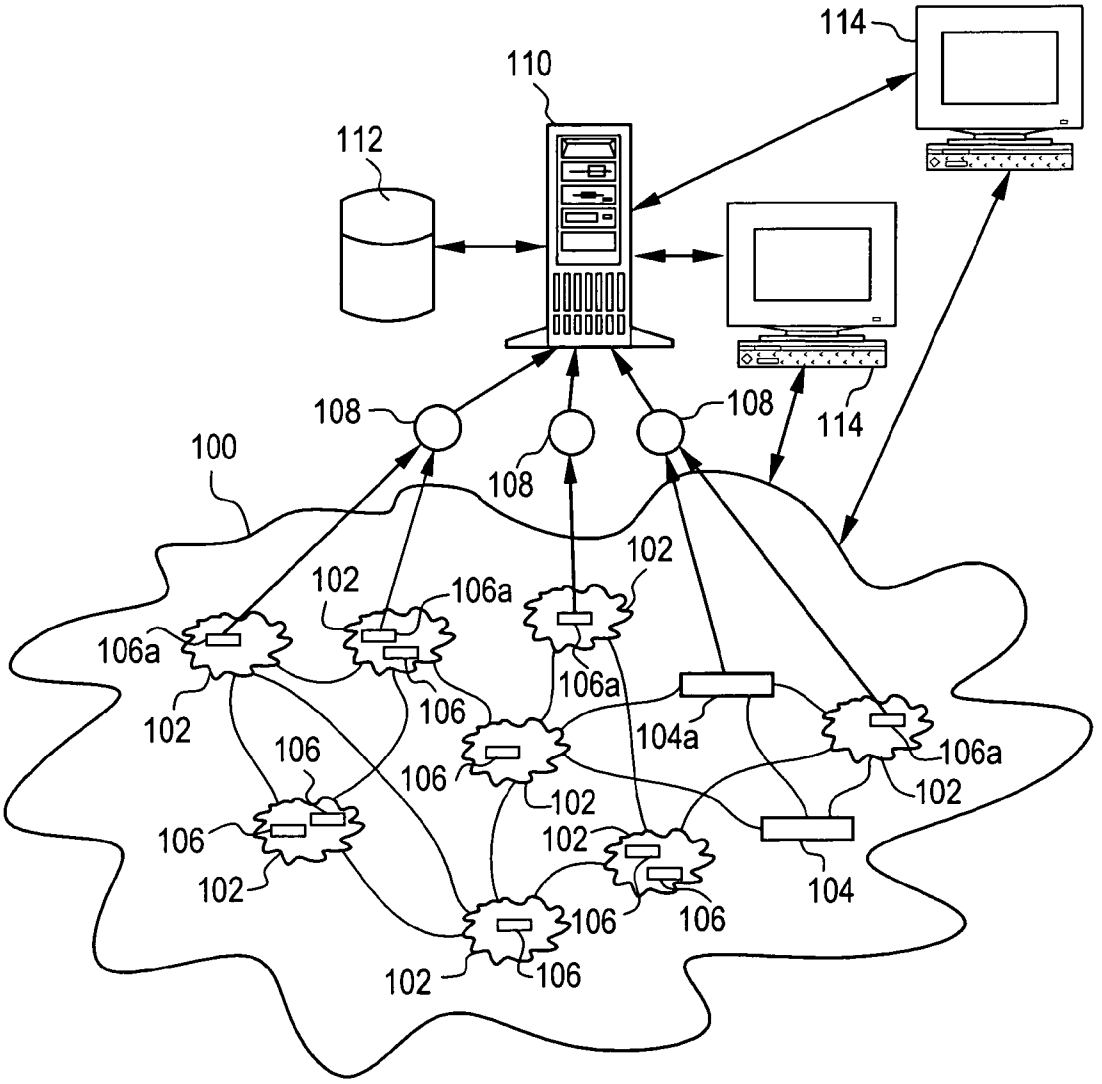
114
110
112
108
108
108
114
100
102
102
106a
106a
106a
102
106
106a
104a
106a
106
106
102
102
106
102
102
104
106
106
102
106

FIG. 2

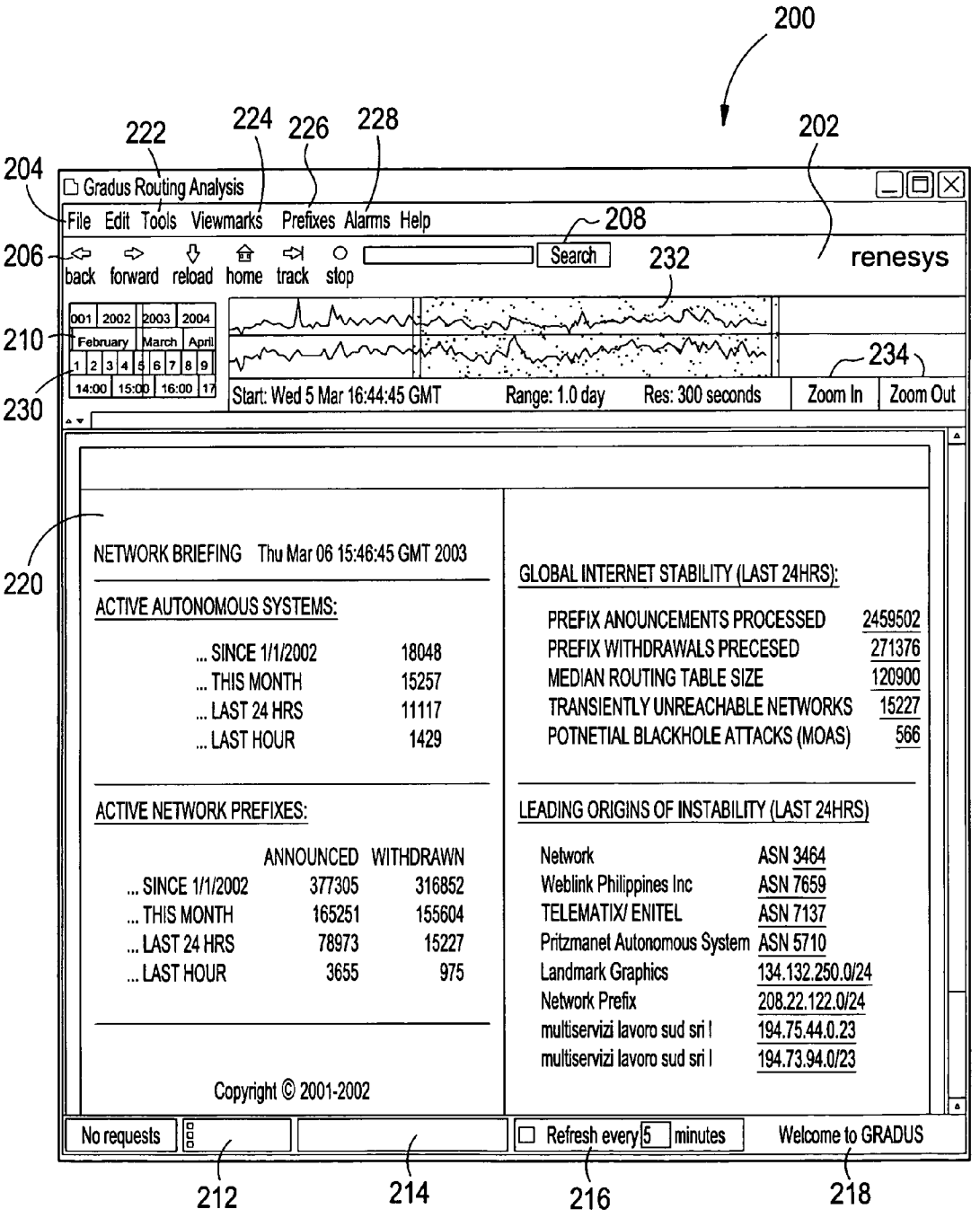
200
202
204
206
208
210
212
214
216
218
220
222
224
226
228
230
232
234
Gradus Routing Analysis
File Edit Tools Viewmarks Prefixes Alarms Help
back forward reload home track stop
Search
renesys
001 2002 2003 2004
February March April
1 2 3 4 5 6 7 8 9
14:00 15:00 16:00 17
Start: Wed 5 Mar 16:44:45 GMT
Range: 1.0 day
Res: 300 seconds
Zoom In
Zoom Out
NETWORK BRIEFING Thu Mar 06 15:46:45 GMT 2003
ACTIVE AUTONOMOUS SYSTEMS:
... SINCE 1/1/2002 18048
... THIS MONTH 15257
... LAST 24 HRS 11117
... LAST HOUR 1429
ACTIVE NETWORK PREFIXES:
ANNOUNCED WITHDRAWN
... SINCE 1/1/2002 377305 316852
... THIS MONTH 165251 155604
... LAST 24 HRS 78973 15227
... LAST HOUR 3655 975
Copyright © 2001-2002
GLOBAL INTERNET STABILITY (LAST 24HRS):
PREFIX ANOUNCEMENTS PROCESSED 2459502
PREFIX WITHDRAWALS PRECESED 271376
MEDIAN ROUTING TABLE SIZE 120900
TRANSIENTLY UNREACHABLE NETWORKS 15227
POTNETIAL BLACKHOLE ATTACKS (MOAS) 566
LEADING ORIGINS OF INSTABILITY (LAST 24HRS)
Network ASN 3464
Weblink Philippines Inc ASN 7659
TELEMATIX/ ENITEL ASN 7137
Pritzmanet Autonomous System ASN 5710
Landmark Graphics 134.132.250.0/24
Network Prefix 208.22.122.0/24
multiservizi lavoro sud sri l 194.75.44.0.23
multiservizi lavoro sud sri l 194.73.94.0/23
No requests
Refresh every 5 minutes
Welcome to GRADUS

FIG. 3

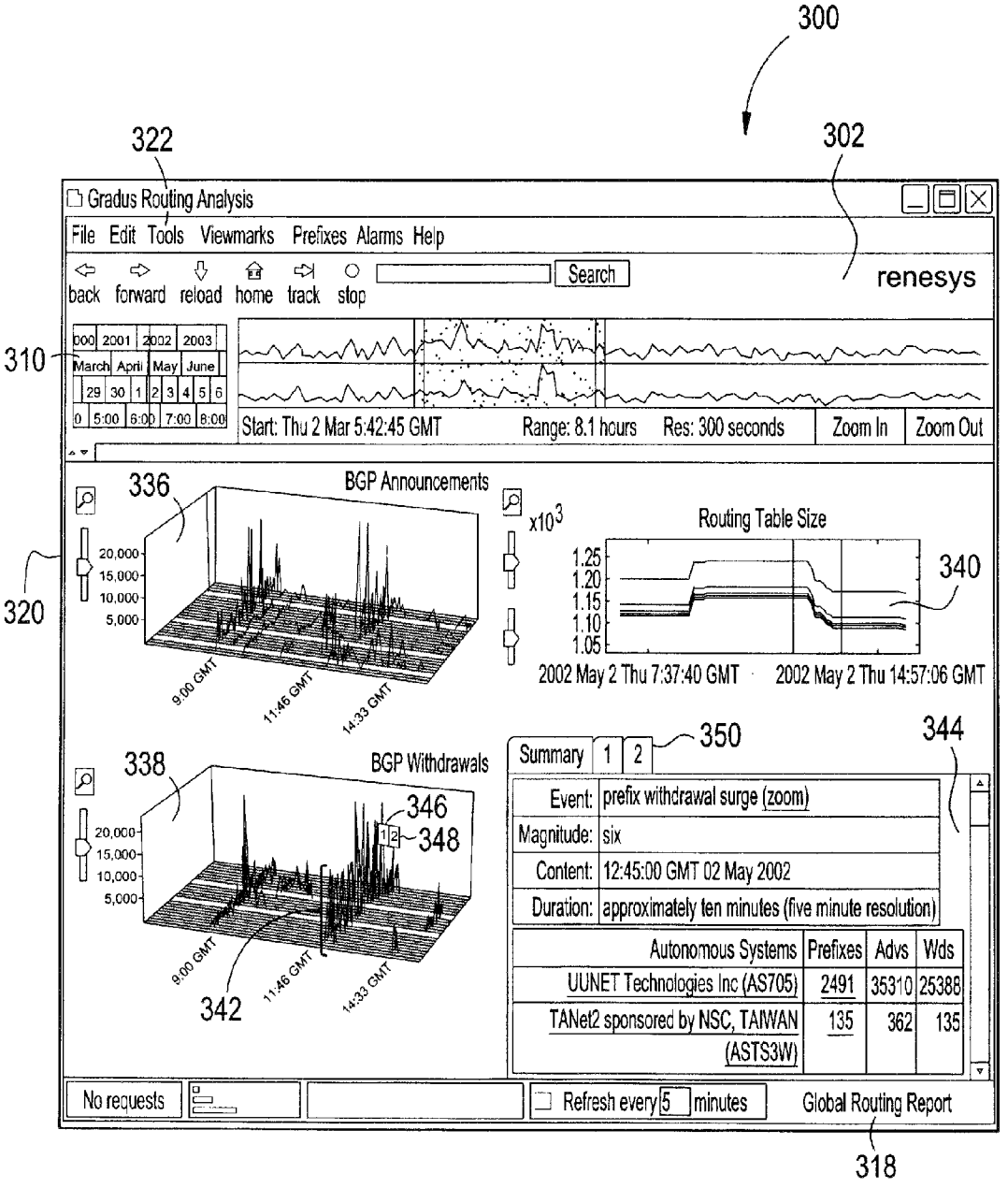
300
322
302
Gradus Routing Analysis
File Edit Tools Viewmarks Prefixes Alarms Help
back forward reload home track stop
Search
renesys
310
2000 2001 2002 2003
March April May June
29 30 1 2 3 4 5 6
0 5:00 6:00 7:00 8:00
Start: Thu 2 Mar 5:42:45 GMT
Range: 8.1 hours
Res: 300 seconds
Zoom In
Zoom Out
320
336
BGP Announcements
20,000
15,000
10,000
5,000
9:00 GMT
11:46 GMT
14:33 GMT
x10^3
Routing Table Size
1.25
1.20
1.15
1.10
1.05
340
2002 May 2 Thu 7:37:40 GMT
2002 May 2 Thu 14:57:06 GMT
338
BGP Withdrawals
346
348
342
350
344
Summary
1
2
Event: prefix withdrawal surge (zoom)
Magnitude: six
Content: 12:45:00 GMT 02 May 2002
Duration: approximately ten minutes (five minute resolution)
Autonomous Systems
Prefixes
Advs
Wds
UUNET Technologies Inc (AS705)
2491
35310
25388
TANet2 sponsored by NSC, TAIWAN (ASTS3W)
135
362
135
No requests
Refresh every 5 minutes
Global Routing Report
318

FIG. 4

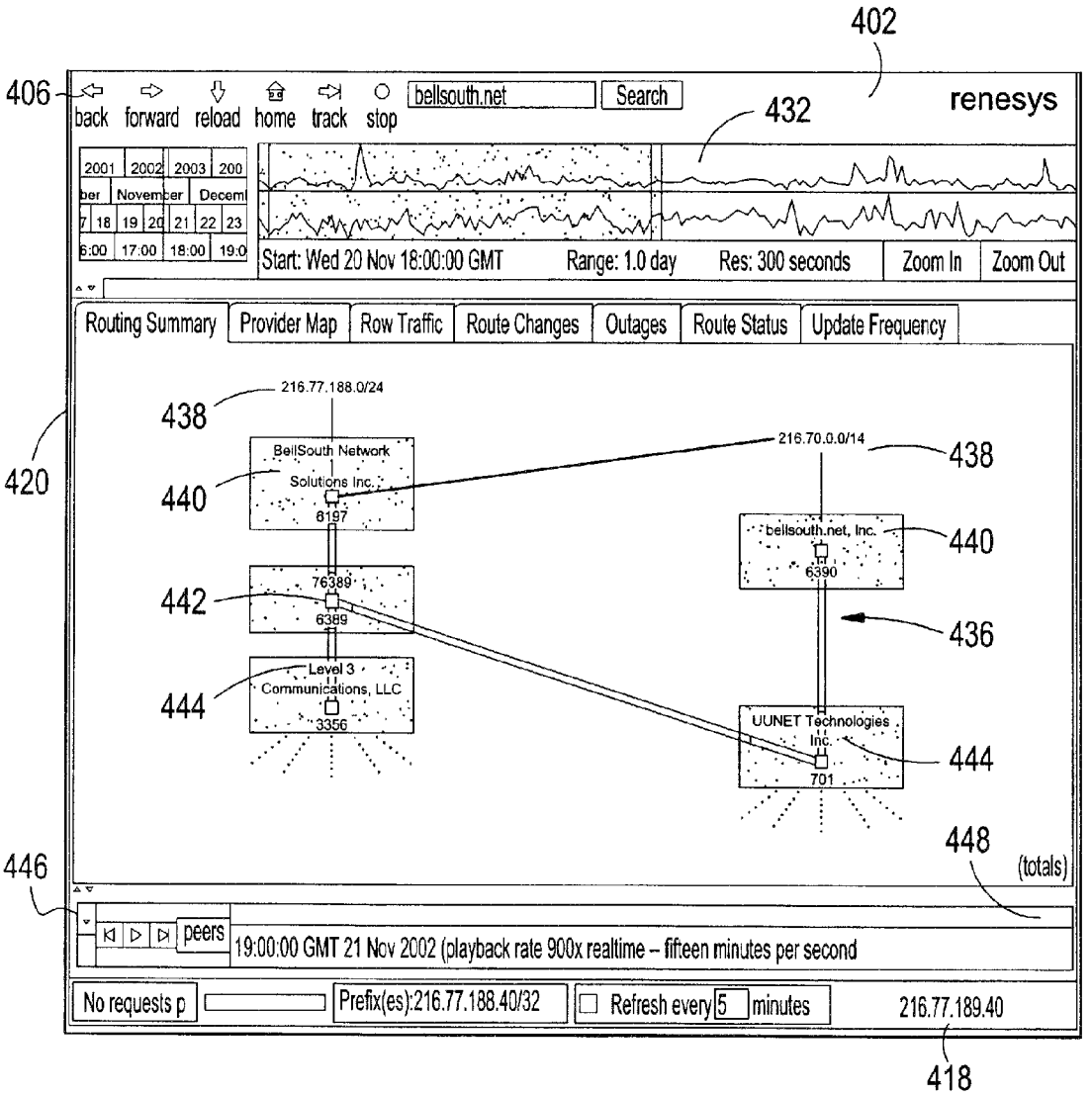
402
406
back
forward
reload
home
track
stop
bellsouth.net
Search
renesys
432
Start: Wed 20 Nov 18:00:00 GMT
Range: 1.0 day
Res: 300 seconds
Zoom In
Zoom Out
Routing Summary
Provider Map
Row Traffic
Route Changes
Outages
Route Status
Update Frequency
420
438
216.77.188.0/24
BellSouth Network
Solutions Inc.
6197
440
76389
6389
442
Level 3
Communications, LLC
3356
444
216.70.0.0/14
438
bellsouth.net, Inc.
6390
440
436
UUNET Technologies
Inc.
701
444
448
(totals)
446
peers
19:00:00 GMT 21 Nov 2002 (playback rate 900x realtime – fifteen minutes per second
No requests p
Prefix(es):216.77.188.40/32
Refresh every 5 minutes
216.77.189.40
418

FIG. 5

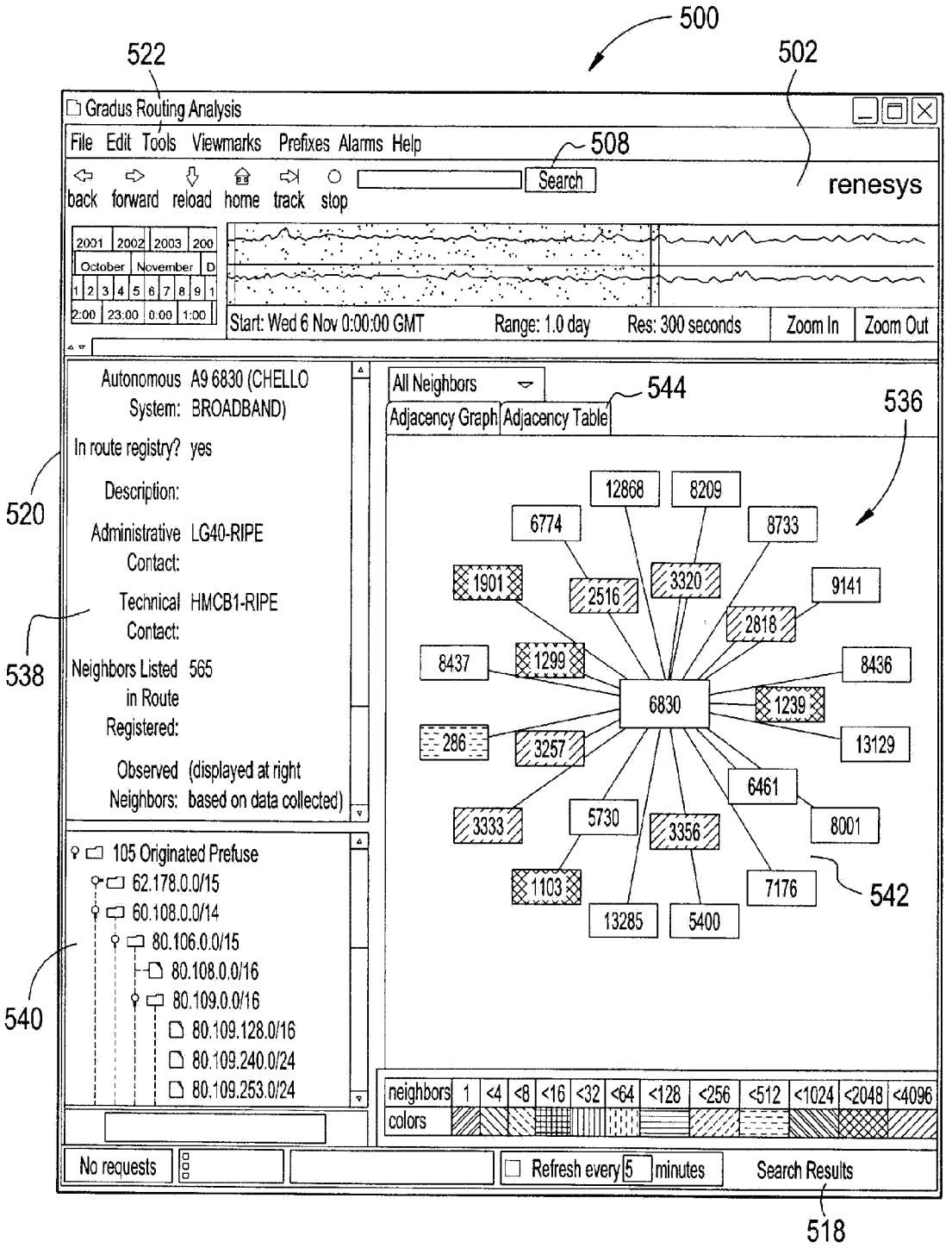
500
522
502
Gradus Routing Analysis
File Edit Tools Viewmarks Prefixes Alarms Help
508
Search
back forward reload home track stop
renesys
2001 2002 2003 200
October November D
Start: Wed 6 Nov 0:00:00 GMT
Range: 1.0 day
Res: 300 seconds
Zoom In
Zoom Out
520
Autonomous System: A9 6830 (CHELLO BROADBAND)
In route registry? yes
Description:
Administrative Contact: LG40-RIPE
538
Technical Contact: HMCB1-RIPE
Neighbors Listed in Route Registered: 565
Observed Neighbors: (displayed at right based on data collected)
All Neighbors
544
Adjacency Graph
Adjacency Table
536
12868
8209
6774
8733
1901
2516
3320
9141
2818
8437
1299
8436
6830
1239
286
3257
13129
6461
3333
5730
3356
8001
1103
7176
542
13285
5400
540
105 Originated Prefuse
62.178.0.0/15
60.108.0.0/14
80.106.0.0/15
80.108.0.0/16
80.109.0.0/16
80.109.128.0/16
80.109.240.0/24
80.109.253.0/24
neighbors 1 <4 <8 <16 <32 <64 <128 <256 <512 <1024 <2048 <4096
colors
No requests
Refresh every 5 minutes
Search Results
518

FIG. 6

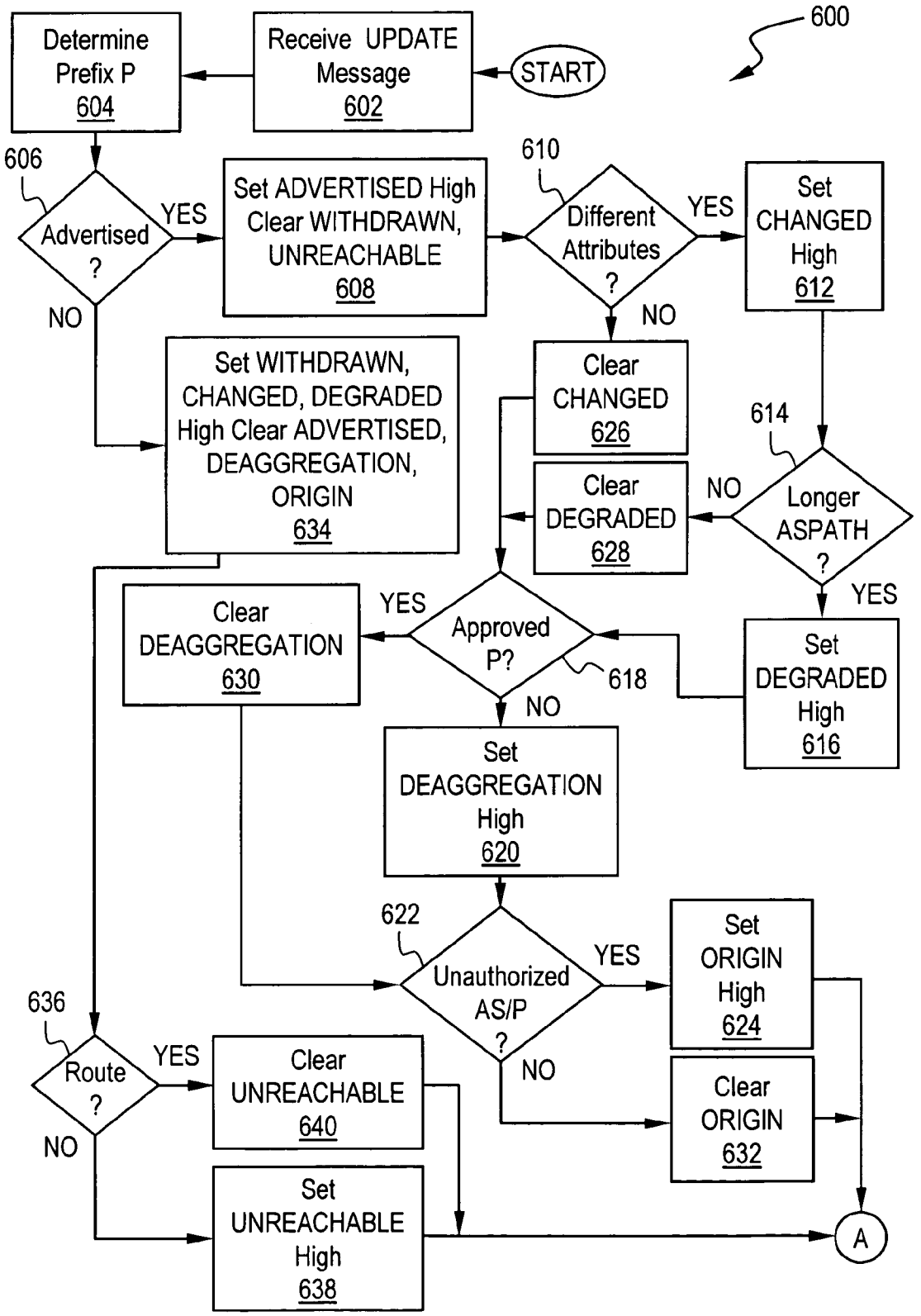
600
START
Receive UPDATE Message 602
Determine Prefix P 604
606
Advertised ?
YES
NO
Set ADVERTISED High Clear WITHDRAWN, UNREACHABLE 608
610
Different Attributes ?
YES
NO
Set CHANGED High 612
Clear CHANGED 626
Set WITHDRAWN, CHANGED, DEGRADED High Clear ADVERTISED, DEAGGREGATION, ORIGIN 634
614
Longer ASPATH ?
NO
YES
Clear DEGRADED 628
Approved P?
618
YES
NO
Clear DEAGGREGATION 630
Set DEGRADED High 616
Set DEAGGREGATION High 620
622
Unauthorized AS/P ?
YES
NO
Set ORIGIN High 624
Clear ORIGIN 632
636
Route ?
YES
NO
Clear UNREACHABLE 640
Set UNREACHABLE High 638
A

FIG. 7

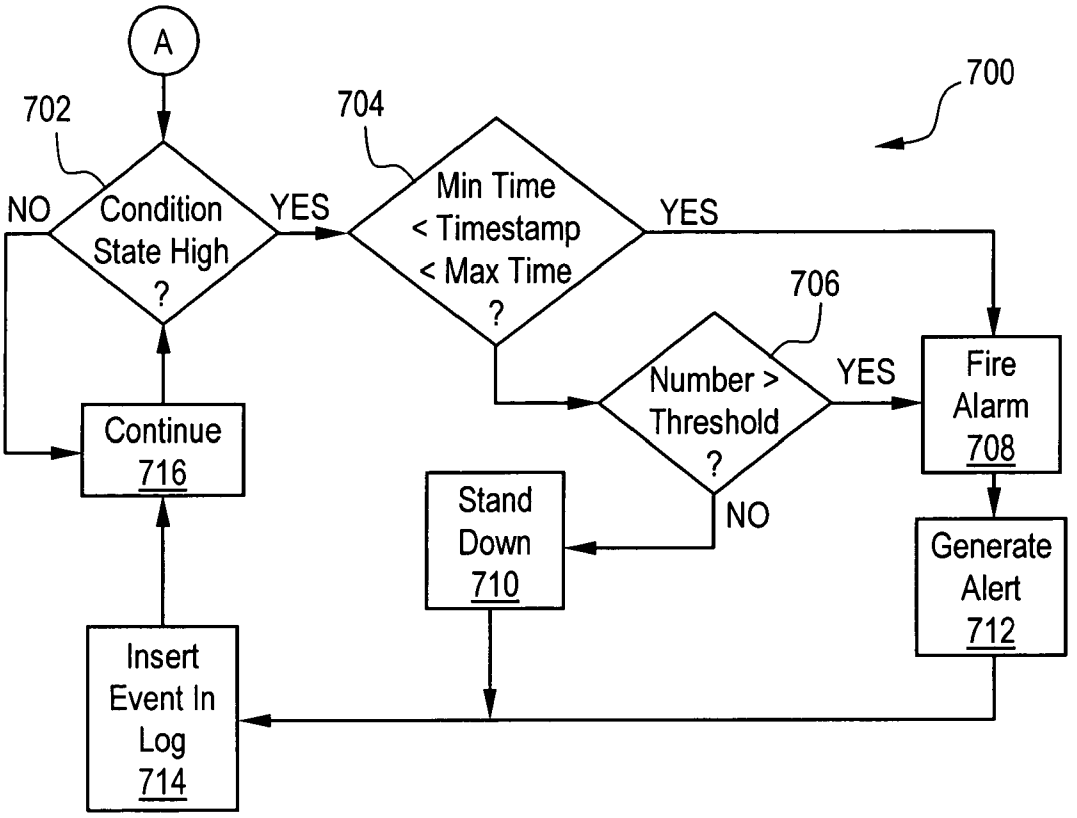
A
700
702
Condition State High ?
NO
YES
704
Min Time < Timestamp < Max Time ?
YES
706
Number > Threshold ?
YES
NO
Fire Alarm 708
Generate Alert 712
Stand Down 710
Continue 716
Insert Event In Log 714

FIG. 8

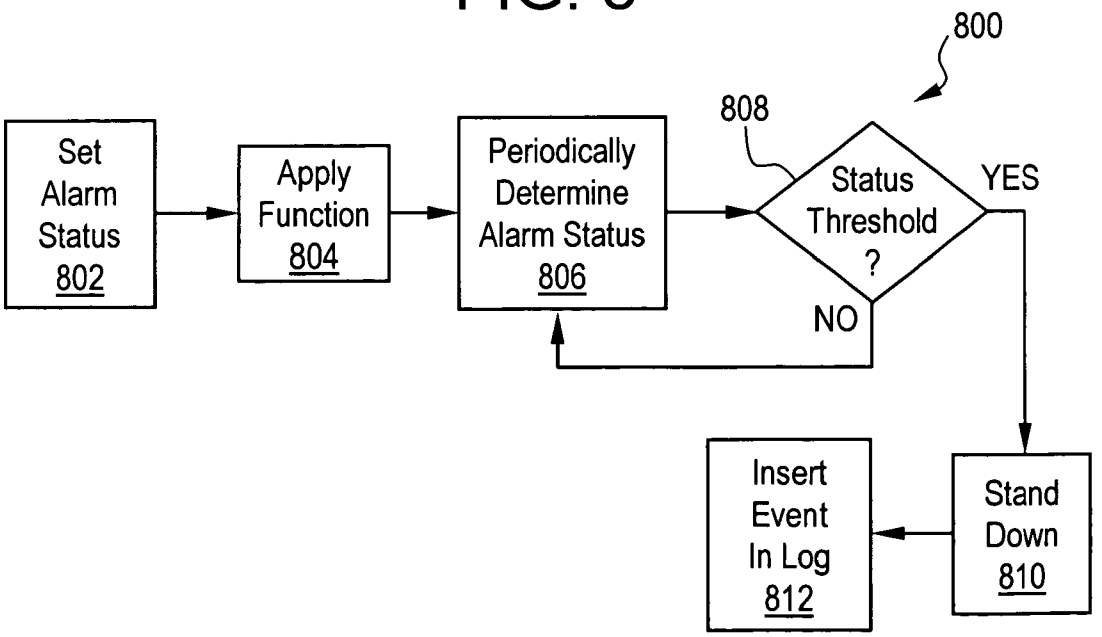
800
Set Alarm Status 802
Apply Function 804
Periodically Determine Alarm Status 806
808
Status Threshold ?
YES
NO
Stand Down 810
Insert Event In Log 812

FIG. 9

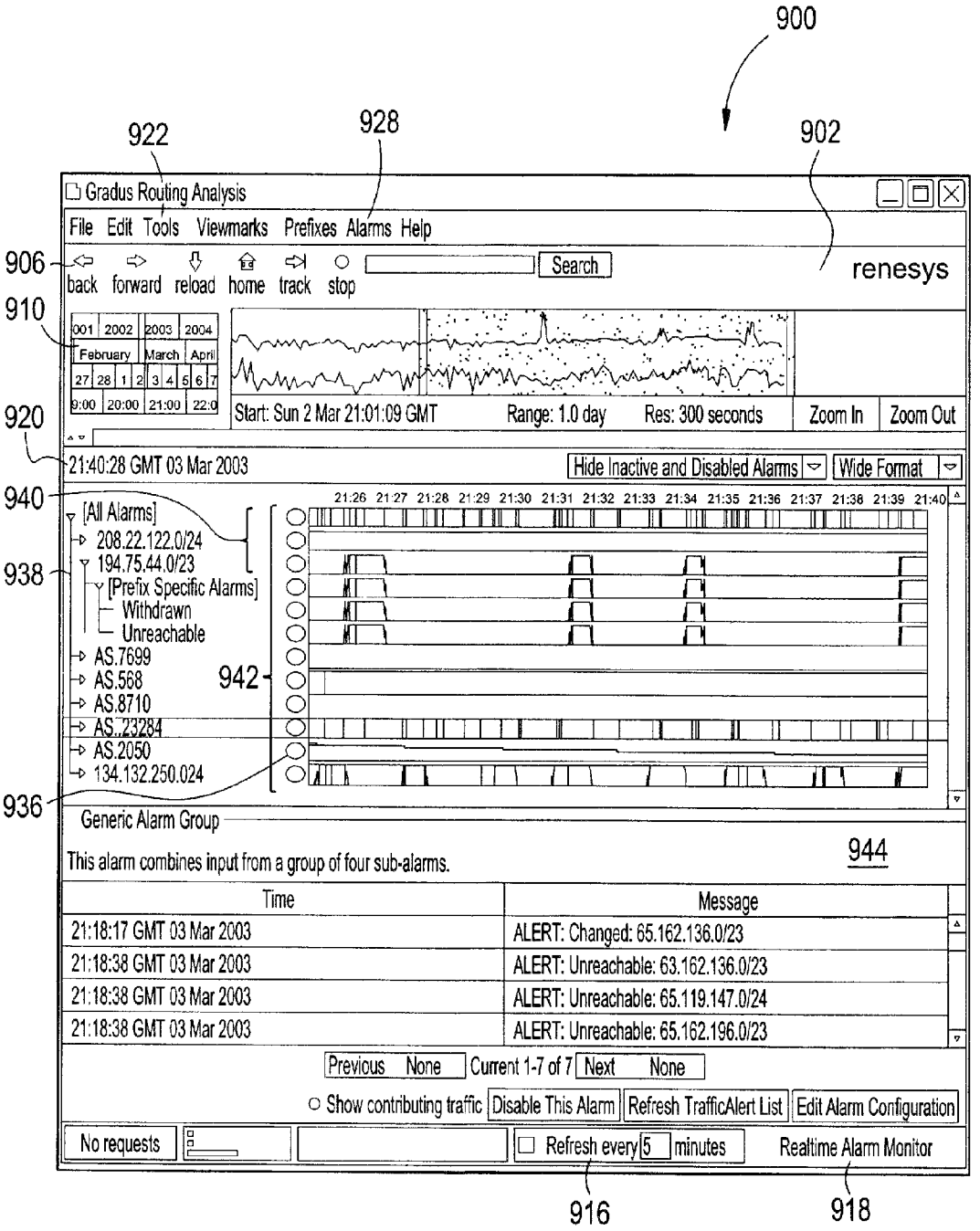
900
922
928
902
Gradus Routing Analysis
File Edit Tools Viewmarks Prefixes Alarms Help
906
back forward reload home track stop
Search
renesys
910
001 2002 2003 2004
February March April
27 28 1 2 3 4 5 6 7
9:00 20:00 21:00 22:0
Start: Sun 2 Mar 21:01:09 GMT
Range: 1.0 day
Res: 300 seconds
Zoom In
Zoom Out
920
21:40:28 GMT 03 Mar 2003
Hide Inactive and Disabled Alarms
Wide Format
940
21:26 21:27 21:28 21:29 21:30 21:31 21:32 21:33 21:34 21:35 21:36 21:37 21:38 21:39 21:40
[All Alarms]
208.22.122.0/24
194.75.44.0/23
938
[Prefix Specific Alarms]
Withdrawn
Unreachable
AS.7699
AS.568
AS.8710
AS..23284
AS.2050
134.132.250.024
942
936
Generic Alarm Group
This alarm combines input from a group of four sub-alarms.
944
Time
Message
21:18:17 GMT 03 Mar 2003
ALERT: Changed: 65.162.136.0/23
21:18:38 GMT 03 Mar 2003
ALERT: Unreachable: 63.162.136.0/23
21:18:38 GMT 03 Mar 2003
ALERT: Unreachable: 65.119.147.0/24
21:18:38 GMT 03 Mar 2003
ALERT: Unreachable: 65.162.196.0/23
Previous None
Current 1-7 of 7
Next None
Show contributing traffic
Disable This Alarm
Refresh TrafficAlert List
Edit Alarm Configuration
No requests
Refresh every 5 minutes
Realtime Alarm Monitor
916
918

METHODS AND SYSTEMS FOR MONITORING NETWORK ROUTING

RELATED APPLICATIONS

This application claims priority to, and incorporates by reference, the entire disclosure of U.S. Provisional Patent Application No. 60/455,722, filed on Mar. 18, 2003.

BACKGROUND

(1) Field

The disclosed methods and systems relate to monitoring network routing, and more particularly to monitoring, collecting, analyzing and presenting to users network data from a plurality of network routers.

(2) Description of Relevant Art

Though transparent to most users, the global routing infrastructure, as characterized by the Internet and World Wide Web (WWW) is not a fully automated system. It can depend on the constant efforts of large numbers of network operators and engineers around the world. Accidental misconfigurations and failures can and do happen regularly, and deliberate infrastructure attacks are an ever-present danger. External Border Gateway Protocol (BGP) routing problems endanger seamless operation of extranets, virtual private networks (VPNs), portals, logistics chains, network-delivered services and other distributed IT systems. Typically, existing network monitoring solutions can be limited to monitoring an organization's internal routers. Such monitoring does not afford an opportunity to observe dynamic changes of the routes that other nodes on the network take to access the organization's routers.

BGP routing is a critical part of the global communications infrastructure. Because BGP provides the mechanics for global redistribution of routing information, failures in BGP due to misconfigurations, hardware problems, router software bugs, and network attacks can have serious and costly impacts on any networked enterprise. In general, the global Internet can be composed of Autonomous Systems (ASes) glued together using BGP. The ASes can include independently administered IP networks, ranging in size from global enterprises with thousands of big routers to tiny operations with a single PC router. There is no global coordination of BGP routes. Instead, BGP routers choose and re-announce routes according to the local administrative policy applied to routing messages it receives from its neighbors. The policy coordination is generally limited to neighboring ASes, and thus BGP routes are constructed piecewise, from AS to AS. Well-managed ASes coordinate their policies, while other ASes can become a source of problems that can spread worldwide.

The design of BGP (version 4) is based on the Internet environment of the early 1990's. In June 1994, there were about 400 active ASes, and about 20,000 prefixes in a full table, the prefixes identifying groupings of nodes on the network. The largest AS had some 30 neighbors, and a Network Access Point (NAP) router might receive about a gigabyte of BGP messages per month. By contrast, in December 2002 there were over 17,000 active ASes, about 120,000 prefixes in a full table, and an AS could have over 3,000 neighbors. While vendors have improved router speeds and the quality of BGP implementations in response to the large increase in routing traffic, there have not been corresponding strides in building tools for addressing or managing routing complexity. Today, BGP message streams exchanged by border routers are bursty and voluminous, and can exceed several gigabytes per day in a single router in an Internet exchange, and routing patterns

are constantly changing. BGP routing problems having global impacts on Internet traffic have become commonplace.

Such problems can have myriad root causes, including router misconfigurations, link layer failures, software bugs, and collateral damage from high-speed scanning and DoS attacks. BGP instability routinely translates into degraded quality of service, and can result in complete loss of connectivity. BGP route changes can propagate relatively slowly on the network, with convergence times ranging from tens of seconds to several minutes. Such route changes can create transient unreachabilities and packet drops, which can affect large numbers of traffic flows on today's high speed networks. A misconfiguration or an attack can last many hours before it is mitigated. Routing problems can have significant economic consequences. Correctness and stability of BGP operation can be vital for the seamless operation of extranets, virtual private networks (VPNs), portals, supplier-provider logistics chains, network-delivered services and other mission-critical IT systems. Though often touted as overcoming routing problems, virtual networks can be as vulnerable to BGP routing failures as other connections traversing multiple ASes beyond their administrative reach.

A BGP failure to route enterprise traffic to strategically important networks can be particularly frustrating if the root cause lies in a remote AS. The requirements of global communications thus imply a need for monitoring the health of global routing for rapid problem mitigation. However, a lack of proper tools can limit existing network monitoring systems to the scope of a single AS. Basic Simple Network Management Protocol (SNMP) based systems for monitoring of network devices and aggregate traffic are routinely deployed in networked organizations. They can provide important information about the flow of traffic within a monitored AS, but generally cannot provide information about traffic that has left the AS. In fact, traffic to external addresses on the average traverses three to four ASes before it reaches its destination. A global BGP monitoring system that can quickly alert an organization to routing problems affecting the organization's traffic, regardless of where the problem originates in the Internet, can be an important component of a comprehensive network management, security or surveillance system.

However, typical existing network monitoring solutions can be limited to an organization's own routers. Such solutions do not resolve problems that originate beyond the network's administrative boundary, especially if a problem originates further beyond the next-hop peer and/or provider networks. Essentially, a single router, and even a single AS, can be said to have a myopic view of the Internet—it can see the routes radiating from itself to networks in other ASes, but is blind to other routes traversing the Internet. However, correlating behavior based on the unseen routes can help to localize BGP problems.

Generating real time BGP routing alarms and resolving their root causes can require multi-router, multi-AS monitoring. Periodic analysis of routing tables can be insufficient in that such periodic analysis only offers snapshots frozen in time, missing the dynamics of the routing changes propagating through the network. Current practices of BGP monitoring, troubleshooting and security evaluation can typically be based on a combination of SNMP based monitoring of one's own routers, various means for processing Internet Protocol (IP) BGP output, examination of routes in remote looking glass routers, and seeking collaborative help from various operator's groups, such as the North American Network Operators' Group (NANOG), and other, similar mailing lists. Such approaches can be slow and labor intensive, and require highly skilled professionals.

SUMMARY

The disclosed methods and systems include network monitoring services that can monitor evolving routes to networks in real time as seen from multiple vantage points in the network. Interactive routing analyses, drill-down and forensics can be performed using an extensive repository of Border Gateway Protocol update traffic. The routing message data can be collected from a large number of routers on the network, and correlated across multiple routers and across time. Additionally, the data in the repository can correlate with routing registry data and/or Domain Name Service (DNS) data. In one embodiment, the data can be streamed to a user in real time (e.g., in XML or another format) and additionally and/or optionally, the user can interactively query the data. Alarms can be set to detect selected routing problems. In setting the alarms, the message data for routers can be processed in timestamp order. Current message data from routers can be compared with previous message data to determine a condition status. An alarm can be fired when the condition status meets temporal correlation criteria and/or spatial correlation criteria.

As used herein, the "firing" of an alarm, and other derivatives of the word "fire" in relation to an alarm, can be understood to be the setting, establishing, maintaining and/or providing of an alarm, which can be an audio, visual, and/or other indicator. Further, although the disclosed methods and systems refer to "firing" an alarm when a condition or other criteria "exceeds a threshold," it can be understood that such expression includes and thus also refers to a comparison of one value (e.g., data) to another value (e.g., alarm threshold), and based on the comparison, setting/firing an alarm, and/or not setting/firing an alarm. As provided herein, to "stand down" an alarm can be understood to unset, clear, not provide, not maintain, and/or otherwise eliminate an alarm that was previously provided, set, maintained, and/or established.

In one embodiment, the disclosed methods and systems include a computer program tangibly stored on a computer-readable medium and operable to cause a computer to enable monitoring network traffic, and can include instructions to collect routing message data from a plurality of routers on the network, correlate the routing message data across multiple routers and across time to obtain correlated data, and analyze the correlated data to obtain routing patterns. The routing message data can be Border Gateway Protocol message data. Collecting data can include collecting structural information regarding the network, including routing registry data and Domain Name Service data. The structural information can be correlated with the routing message data. The routing patterns can be streamed in real-time over the network. Collecting the data can include establishing sessions between collector routers and remote peer routers located in geographically diverse locations.

The computer program can include instructions to provide an alarm(s) (e.g., routing alarms) based on the routing patterns. To provide routing alarms, the computer program can include instructions to process the message data for network prefixes in timestamp order, compare current message data for prefixes with previous message data for the prefix to determine a condition status for alarm conditions of the prefix, and fire the routing alarm for the prefix when the condition status meets a temporal correlation criteria and/or a spatial correlation criteria. Graphical representations of the fired routing alarms can be presented to a user.

The computer program can determine that the condition status meets the temporal correlation criteria when the condition status indicates at least one of the alarm conditions is high for a predetermined time duration, and that the condition status meets the spatial correlation criteria when the condition status for a predetermined number of prefixes indicate a same alarm condition is high. The computer program can further determine that the condition status meets the spatial correlation criteria when the condition status for a predetermined number of prefixes having a specified geographical distribution indicate a same alarm condition is high.

The instructions to provide the routing alarms can further include instructions to assign a value to the routing alarms, apply a processing scheme to the values (e.g., to decrease the values over time), and remove an identified routing alarm based on a comparison of the value of the alarm to a predetermined valued (e.g., when the value of the identified routing alarm decreases below a predetermined value). A set of the alarms can be summarized to obtain a composite alarm. The instructions to summarize can include instructions to combine routing alarms based on network prefixes, Autonomous Systems on the network and/or sub-networks on the network. The instructions to combine routing alarms based on network prefixes can include instructions to generate a list of more-specific prefixes and/or a list of origin Autonomous System prefixes based on the routing message data for the network prefixes lists of more-specific prefixes, and to combine the routing alarms for the more-specific prefixes and for the origin Autonomous System prefixes chosen from the respective lists.

The instructions to analyze the correlated data can include instructions to process one or more time series of the correlated data by detecting features in the correlated data corresponding to a plurality of the multiple routers having similar patterns of message data over selected portions of the time series. The instructions to detect features can include instructions to determine when the correlated data for the multiple routers indicates the routing message data exceeds a threshold number of prefixes. The instructions can include instructions to identify sub-networks and/or Autonomous Systems on the network corresponding to the correlated data of the features, and can include instructions to vary the timescales of the selected portions of the time series. The instructions to process can include instructions to apply signal processing techniques including feature detection, correlation and clustering techniques, where such techniques can be applied over multiple time series, as provided herein.

Graphical representations of the routing message data and/or the correlated data can be presented to a user. The user can interactively query the data based on the graphical representations. The computer program can include instructions to process the queries and present data matching the queries to the user.

In one embodiment, a method of real-time delivery of network data can include collecting routing data from a plurality of routers on the network, correlating the routing data across multiple routers and across time to obtain the network data, and streaming the network data to users over the network. Correlating the routing data can include determining at least one of a number of network metrics, including a globally reachable network prefix metric, an intensity metric indicative of total routing message traffic on the network, an unreachable network metric, a route instability metric, route instability score distribution metrics.

Determining the globally reachable network prefix metric can include determining default-free routing table sizes over a predetermined timeframe, such that the metric reflects connectivity losses and degradation events and variations in a size of the network. Determining the intensity metric can include determining total route announcement message traf-

fic and total withdrawal message traffic. Determining the unreachable network metric can include tracking a number of sub-networks estimated to be temporarily unreachable, optionally conditioned on prior reachability to correct for expected levels of sub-network arrivals and departures. Determining the route instability metric can include applying an instability score to routes to each prefix, cumulatively computing the instability score for each prefix over time, and suppressing the instability score following route stabilization. Determining the route instability score distribution metrics can include determining a set of vectorial metrics representing a breakdown of route instabilities according to severity and prefix size.

The method can include detecting features in the network data corresponding to multiple ones of the plurality of routers having similar patterns of network metrics over varying timescales. Detecting features can include determining when the network data for each of the multiple ones of the plurality of routers indicates a number of prefixes exceeds a threshold number of prefixes for at least one metric. The method can include identifying sub-networks and/or Autonomous Systems corresponding to prefixes associated with the network data of the features.

In one embodiment, a method of providing routing alarms for a network can include processing, for a plurality of peer routers distributed in the network, Border Gateway Protocol (BGP) UPDATE messages in timestamp order for network prefixes identified in the BGP UPDATE messages, setting at least one alarm condition for network prefixes based on a comparison of current messages received and previous messages received, correlating the alarm conditions over time and across multiple peer routers, and firing a routing alarm for a network prefix when at least one of the alarm conditions meets a temporal correlation criterion and/or a spatial correlation criterion. The alarm condition meets the temporal correlation criteria when the alarm condition is set for a predetermined time duration, and the alarm condition meets the spatial correlation criteria when the alarm condition is set for a predetermined number of peer routers, or is set for a predetermined number of peer routers having a specified geographical distribution.

Providing the routing alarms can include assigning a value to the routing alarms, applying a processing scheme to the values, and removing an identified routing alarm when the value of the identified routing alarm attains a predetermined value. The processing scheme can decrease the values based on time, although other processing schemes can be used (e.g., fixed over time, fixed and decreasing schemes, etc.). A set of routing alarms can be summarized to obtain a composite alarm by combining routing alarms based on network prefixes, Autonomous Systems on the network, and/or sub-networks on the network. The method can generate lists of more-specific prefixes and/or lists of origin Autonomous System prefixes based on the routing message data for the network prefixes, and can combine routing alarms for the more-specific prefixes and for the origin Autonomous System prefixes chosen from the respective lists.

The method can set a variety of alarm conditions based on varying criteria, including setting an ADVERTISED condition for a prefix to high when the prefix is advertised, setting a CHANGED condition for a prefix to high when the prefix is advertised with one or more different BGP attributes or when the prefix is withdrawn, setting a DEGRADED condition for a prefix to high when the prefix is advertised with a longer ASPATH or when the prefix is withdrawn, setting a WITHDRAWN condition for a prefix to high when the prefix is withdrawn, setting an UNREACHABLE condition for a prefix to high when the prefix is withdrawn and there is no route to a less specific prefix, setting a DEAGGREGATION condition to high for a prefix when an unauthorized, more specific prefix is advertised, and setting an ORIGIN condition for a prefix to high when the prefix was advertised by an unauthorized Autonomous System on the network, or when an Autonomous System on the network advertises an unauthorized prefix.

BRIEF DESCRIPTION OF THE DRAWINGS

FIG. **1** illustrates a network environment that can accommodate the methods and systems described herein;

FIG. **2** illustrates an exemplary user interface for monitoring and analysis of network routing data;

FIG. **3** illustrates an exemplary user interface for a global routing report;

FIG. **4** illustrates an exemplary user interface for a provider map;

FIG. **5** illustrates an exemplary user interface for an AS neighbor graph;

FIG. **6** illustrates a flow chart for a method of setting condition states;

FIG. **7** illustrates a flow chart for a method of triggering alarms based on the condition states;

FIG. **8** illustrates a flow chart for a method of varying alarm statuses over time; and,

FIG. **9** illustrates an exemplary user interface for alarm monitoring and configuring.

DESCRIPTION

To provide an overall understanding, certain illustrative embodiments will now be described; however, it will be understood by one of ordinary skill in the art that the systems and methods described herein can be adapted and modified to provide systems and methods for other suitable applications and that other additions and modifications can be made without departing from the scope of the systems and methods described herein.

Unless otherwise specified, the illustrated embodiments can be understood as providing exemplary features of varying detail of certain embodiments, and therefore, unless otherwise specified, features, components, modules, and/or aspects of the illustrations can be otherwise combined, separated, interchanged, and/or rearranged without departing from the disclosed systems or methods. Additionally, the shapes and sizes of components are also exemplary and unless otherwise specified, can be altered without affecting the scope of the disclosed and exemplary systems or methods of the present disclosure.

The present disclosure is directed to network monitoring services that can monitor evolving routes to networks as seen from multiple vantage points in the network. In one embodiment, the methods and systems can be performed substantially in real-time. The routing message data can be collected from a large number of routers on the network and stored in a repository of Border Gateway Protocol (BGP) update traffic. The data in the repository can be correlated across multiple routers and across time. Additionally, the data in the repository can correlate with routing registry data and/or Domain Name Service (DNS) data. Interactive queries, routing analyses, drill-down and forensics can be performed on the collected data. In addition, data and analysis can be streamed to a user, for example, in real-time. Alarms can be provided and/or set to detect selected routing problems. In setting the alarms, the message data for routers can be processed in

timestamp order. Current message data from routers can be compared with previous message data to determine a condition status. An alarm can be fired when the condition status meets temporal correlation criteria and/or spatial correlation criteria.

For convenience and explanatory purposes, the systems and methods can be described herein with reference to exemplary systems and methods for use with the global Internet. However, the systems and methods described herein are not to be limited to the embodiments disclosed herein, and can be applicable to other networks with other configurations, and can include other applications and/or means for collecting data for monitoring network activity, and that additions, modifications, and/or other changes to the input, processing, and/or output to accommodate such other networks, configuration, and/or data are contemplated by the systems and methods described herein and can be made by those skilled in the art.

Referring to FIG. **1**, a network **100** is illustrated, which can accommodate the methods and systems described herein. Network **100** can include a large number of Autonomous Systems (ASes) **102** and/or routers **104**, a few of which are shown in FIG. **1**. As described previously herein, the number of ASes on the global Internet is approaching 20,000. As used herein, an AS can be a connected group of one or more Internet Protocol (IP) networks having a single and clearly defined routing policy, that is controlled by a common network administrator (or group of administrators) on behalf of a single administrative entity (such as a university, a business enterprise, a business division, etc.), and can also be referred to herein as a routing domain. Nodes on a given network share the same network prefix but have a unique host number. An AS can include one or more AS border routers **106** and can share routing information with other ASes using the Border Gateway Protocol (BGP).

A number of the AS routers **106** and/or routers **104**, designated as **106***a* and **104***a*, respectively, can maintain peering sessions with collection routers **108**. Generally, the peering sessions can be silent, though sessions can include sending data back to AS routers **106***a* and routers **104***a*. Routers **104***a* and AS routers **106***a* can be strategically located throughout network **100** to provide a perspective of routing messages on network **100**. Collection routers **108** can collect routing message data from the AS routers **106***a* and routers **104***a* for processing. Collection routers **108** do not announce routes to other routers such that the routing message data collected can reflect routing message data for active network components. For clarity, collection routers **108** in FIG. **1** are illustrated separate from network **100**. In practice, some or all of collection routers **108** can be distributed within network **100**.

Collection routers **108** can forward the collected message data to one or more analysis servers **110** that can store or archive the data, as shown in the FIG. **1** embodiment by a BGP database **112**. For clarity and ease of expression, analysis server **110** and database **112** can be illustrated and referred to herein in the singular, though the use of multiple synchronized analysis servers **110** and databases **112** is contemplated. Analysis server(s) **110** can process the message data from database(s) **112** and provide clients **114** with tools for accessing, manipulating, and/or otherwise displaying the processed data to provide network monitoring services to one or more clients **114**. Clients **114** can monitor evolving routes to their networks as seen from multiple vantage points (collection routers **108**) on network **100**. When multiple analysis servers **110** are used, the analysis servers **110** can be synchronized for processing data that can be distributed over multiple databases **112**. Accordingly, the multiple databases **112** can further be synchronized and thus can communicate using wired and/or wireless communications protocols and/or techniques.

Database **112** can include BGP UPDATE message data, routing registry data, DNS data, and/or other network data as can be obtained and/or contemplated by those of skill in the art. BGP-speaking routers, such as routers **104** and AS routers **106**, can send BGP UPDATE message data to their neighbor routers to announce their best routes to certain networks, or to withdraw routes that became unavailable. The neighboring BGP-speaking routers can propagate the UPDATEs to their neighbors, and so on. The UPDATEs are time stamped and can carry BGP attributes (referred to herein as "attribute(s)") that can describe characteristics of prefixes, e.g., an ASPATH attribute lists a sequence of traversed ASes back to the AS originating the prefix. Other attributes can include, but not be limited to, Next Hop, iBGP Next Hop, Third Party Next Hop, Origin, Aggregator, Local Preference, Multi-Exit Discriminator (MED), MED and Interior Gateway Protocol (IGP) Metric, Weight, Community, Well-Known Communities, and No-Export Community. An event impacting global routing can begin with one or more routers originating a certain number of UPDATE messages at approximately the same time, after detecting a root cause routing event, such as a session open, a router shutdown or loss of session, a session reset, and/or a change of Interior Gateway Protocol (IGP) reachability or connectivity for an AS **106**.

The UPDATEs can be seen to propagate across the BGP-speaking routers as a kind of wave front traveling across the network **100** topology. Those of skill in the art can recognize that correlation analysis of the UPDATEs received at routers **104***a* and AS routers **106***a* can detect and localize routing problems, in the manner that earthquakes can be detected and localized by correlating data from a grid of geographically dispersed sensors. Typically, UPDATEs can be originated by multiple routers and reflect multiple root causes, and propagation can be likened to a superposition of wave fronts. The FIG. **1** analysis server **110** can track and correlate the UPDATEs for individual prefixes and/or aggregate prefixes arriving at distinct collection routers **108** to help isolate and diagnose the distinct routing events causing the origination of the UPDATEs. Processing techniques can include feature detection schemes (e.g., Bayesian classifiers, neural networks, etc.), clustering, and/or other signal processing techniques for correlating multiple time series data from multiple sensors.

Applying the above described correlations to the time stamped UPDATE data from database **112**, analysis server **110** can provide a number of network monitoring services to clients **114**, including routing analysis for a given time window/period/interval, streaming monitoring data (e.g., real-time) to clients **114**, and alarms (e.g., real-time) to provide clients **114** with the capability to detect and diagnose BGP routing problems originating outside of their networks.

FIG. **2** illustrates an exemplary user interface **200** that an analysis server **110** can present to user **114** for monitoring and analysis of network **100** routing. Interface **200** is shown for illustrative purposes and other arrangements of the data and controls for manipulating and viewing the data are contemplated. Interface **200** can be configured to include a persistent window control framework **202** that can include menu bar **204**, navigation buttons **206** and a search field **208**. In addition, window control framework **202** can include calendar navigation tool **210**, progress indicator **212**, prefix indicator **214**, refresh selector **216** and tool indicator **218**, and/or other navigation tools, selection tools, indicators and the like. In addition to window control framework **202**, interface **200** can include a window **220** for displaying the requested data.

Menu bar **204** can have a number of pull down menus. FIG. **2** illustrates Files, Edit, Tools, Viewmarks, Prefixes, Alarms and Help menus, though fewer or more menus and/or different arrangements of menus can be contemplated. In particular, Tools menu **222** can include a list of available data display, analysis and alarm tools. When a tool is selected from Tools menu **222**, the contents of window **220** change to reflect the use of the selected tool.

The Viewmarks menu **224** can allow for creation and retrieval of viewmarks for saving references to the data view in the window **220** at the time the viewmark was created. The viewmarks can include extensible Markup Language (XML) records corresponding to the data view in the window **220**. The viewmarks can be used for future retrieval of the data view and/or for sharing the data view, e.g., by emailing a viewmark to another client **114**. As an example, a series of viewmarks can be created during data analysis such that a time progression of the analysis can be presented by sequentially retrieving the viewmarks. Viewmarks menu **224** can include menu items for creating or adding viewmarks, presenting a listing of existing viewmarks, selecting a viewmark for display, either by replacing the current data view, or overlaying the current data view with a new frame, copying viewmarks, editing viewmarks, and/or deleting viewmarks.

The Prefixes menu **226** can provide for creating, selecting, editing and/or deleting lists of network prefixes that can be later selected for direct link to prefix-specific analysis tools. The Alarms menu **228** can provide for creating and editing alarms, as described herein in more detail for the provision of real-time alarms by analysis server **110**.

Navigation buttons **206** can provide for undoing and redoing selection and setting changes, reloading data from analysis server **110**, tracking the latest available data, and/or stopping requests for data. Search tool **208** can provide for searching or querying database **112** to obtain data. Queries can include, but not be limited to queries by AS numbers, prefix names, domain names and/or other network attributes. Upon searching, window **220** can display connectivity information related to the selected ASes, prefixes and/or domain names. Thus, search tool **208** can provide an entry point to multiple tools for data display. FIG. **2** illustrates a welcome interface in window **220** that can provide client **114** with routing information of a more general nature for network **100**, including numbers of active ASes and prefixes, overall network stability metrics, such as numbers of BGP announcements/withdrawals, table sizes, unreachable networks, blackhole attacks, and listings of leading origins of instability.

Calendar navigation tool **210** can provide for choosing a timeframe or time window (e.g., time interval, time period, etc.) of data for analysis. For the exemplary interface **200**, calendar navigation tool **210** can include a calendar **230** for selection of a date and time for the start of the data window, a time-range slider **232** superimposed on graphical representations of aggregate BGP prefix announcement/withdrawal rates, and slider controls **234** for adjusting an expanse of time-range slider **232**. Selection of the start of the data window through calendar **230** sets the left edge of time-range slider **232**. The start can be adjusted by moving the left edge of time-range slider **232**, e.g., by clicking-on/selecting and "dragging" (e.g., manipulating, moving, etc.) the left edge with a mouse. The range of the window can be adjusted by moving the right edge of time-range slider **232**. Time-range slider **232** can be moved left or right, as by dragging with a mouse, to change the start time without changing the range. Other graphical representations and/or provisions for choosing a timeframe in addition to, or in lieu of, calendar navigation tool **210** of interface **200** can be contemplated by those of skill in the art.

Progress indicator **212** can provide for displaying status information regarding data request by a client **114**. For example, status information can include a count of pending requests, an indication of how much data from a pending request has been downloaded, and an indication of memory usage. Prefix indicator **214** can indicate which prefix analysis server **110** is processing. Refresh selector **216** provides for a client **114** to select a refresh rate whereby window **220** can update the display to track the latest data at the selected rate. Tool indicator **218** can provide an indication of the tool selected from Tools menu **222**.

FIG. **3** illustrates an exemplary user interface **300** for displaying a global routing report to client **114** in window **320**, as chosen from Tools menu **322**, and indicated by tool indicator **318**. Generally, interface **300** can correspond with interface **200** of FIG. **2**, having persistent window control framework **302** similar to window control framework **202** of FIG. **2**, such that reference numbers offset by **100** can refer to like features. Interface **300** is shown for illustrative purposes and other arrangements of the data and controls for manipulating and viewing the data are contemplated. The global routing report tool can provide a view on routing activity in network **100** for the selected time range. The report shown in window **320** can include three separate tools: BGP Announcements **336**; BGP Withdrawals **338**; and Routing Table Size **340**.

BGP Announcements **336** and BGP Withdrawals **338** can provide globally correlated, three-dimensional plots of the BGP prefix announcement rates and withdrawal rates, respectively, recorded in the time frame selected by the calendar navigation tool **310**. The x-axes indicate time and the z-axes indicate the number of prefix announcements and withdrawals, respectively. The distinct parallel plot lines indexed on the y-axes correspond to the displayed set of routers **104***a* and ASes routers **106***a*, associated with collecting routers **108** and referred to herein also as peers **104***a*, **106***a*.

The plots **336**, **338** can provide for observing the temporal correlations among the rates of prefix announcements and withdrawals, respectively, as received from distinct peers **104***a*, **106***a*. Wave-like or fence-like features parallel to the y-axes can indicate routing events recorded by most of the displayed peers **104***a*, **106***a* causing surges in prefix announcements or withdrawals propagated globally across network **100**. Single peaks and/or other features specific to a single peer **104***a*, **106***a* can indicate a single AS **102** or router **104** reporting a routing instability. Plots **336**, **338** can include controls for modifying the plot axes and for zooming in on features in the plots. For example, client **114** can zoom in on wave-like feature **342** by selecting a range along the x-axis. Use of the controls can result in re-plotting the plots according to the selected ranges.

Routing Table Size **340** can provide a two-dimensional plot of the sizes of BGP forwarding tables for a number of collection routers **108**. The x-axis indicates time and corresponds with the range shown in plot BGP Announcements **346** and BGP Withdrawals **338**. The y-axis indicates the number of distinct routable prefixes, with each prefix listed once. Each line of plot **340** corresponds to a single BGP routing table. Plot **340** can indicate routing events with global network impact when a number of the lines increase or decrease, for example, within a given time interval, which can be correlated with features in BGP Announcements **346** and BGP Withdrawals **338**. Routing Table Size **340** can include controls for modifying the plot axes.

In addition to the plots **336-340**, window **320** can include analysis box **344**, which can provide detailed information regarding significant routing events detected in the selected data displayed in plots **336-340**. In providing analysis box **344**, an analysis server **110** can process the selected data for correlations, such as wave-like feature **342**, which can identify routing events. Such events can be tagged, as indicated by tags **346**, **348** in plot **338**. For each tag, analysis box **344** can include an associated tab **350**. By selecting a tab, analysis server **110** can perform an analysis of the associated event to determine a probable cause of the detected, event. The results of the analysis can be presented in analysis box **344** in terms of ASes which announced or withdrew the prefixes, and a listing of the prefixes. The ASes and prefixes presented in analysis box **344** can be linked to other tools from Tools menu **222**, e.g., an AS neighbor graph tool and a prefix tool, as described in more detail herein.

As noted, Tools menu **222** can include prefix tools by which analysis server **110** can process the BGP UPDATE data from database **112** for a selected prefix or group of prefixes over a selected period of time. The data can be processed and presented to client **114** in various formats, including overviews of routing activity for the selected prefix(es) in the form of routing summaries, tables of raw traffic, route changes, route outages and route status, and provider maps.

FIG. **4** illustrates a portion of an exemplary interface **400** for displaying a provider map **436** to client **114** in window **420**, as chosen from Tools menu **422** (not shown), with tool indicator **418** showing the selected prefix. Generally, interface **400** can correspond with interface **200** of FIG. **2**, having persistent window control framework **402** similar to window control framework **202** of FIG. **2**, such that reference numbers offset by **200** from those of FIG. **2** can refer to like features. Interface **400** is shown for illustrative purposes and other arrangements of the data and controls for manipulating and viewing the data are contemplated.

Provider map **436** can display origin ASes and the near portion of the routes to the selected prefix that were observed over the selected period of time from peers **104***a*, **106***a*. Thus, provider map **436** can show a subgraph of routes to the selected prefix from the network and can show how the routes have been changing in time. Provider map **436** can identify one or more prefixes **438** covering the selected prefix. Prefixes **438** can include the single selected prefix, and/or can include a row of one or more aggregated (less-specific) prefixes that contain the selected prefix, as shown in exemplary provider map **436** of FIG. **4**. Where applicable, analysis server **110** can detect and display multiple origin prefixes.

Connections between prefixes and ASes **440**, between ASes **440** and one or more network providers **442**, and/or between ASes **440** and network core AS **444** can be color coded, shaded, or otherwise distinctly displayed to distinguish the various connections and whether the connections represent an announced path or a withdrawn path. The thickness of the connections can qualitatively indicate the fraction of peers **104***a*, **106***a* announcing or withdrawing the prefix and whose ASPATH includes the given segment.

In addition, FIG. **4** illustrates a playback control mechanism **446** to examine the time progression of prefix specific data. By choosing forward, reverse, stop, pause, play or other such features of playback control mechanism **446**, similar to well-known controls for a video cassette recorder, client **114** can change the time period displayed in a continuous or incremental fashion. Though shown in connection with provider map **436**, playback control mechanism **446** can be applicable to the various prefix tools described above. Playback control mechanism **446** can also include a time range display **448** with color coded, shaded, or otherwise distinctly displayed block indicators sized to qualitatively represent the number of announcements or withdrawals. Time range display **448** can be expanded to display multiple peers **104***a*, **106***a*, which can be useful in identification and/or tracking of flap damping by upstream ASes and other routing events.

FIG. **5** illustrates an exemplary interface **500** for displaying an AS neighbor graph **536** to client **114** in window **520**, as chosen from Tools menu **522**, or as selected in search window **508**. For the exemplary user interface **500**, tool indicator **518** notes that the AS neighbor graph **536** is the result of an AS search. Generally, interface **500** can correspond with interface **200** of FIG. **2**, having persistent window control framework **502** similar to window control framework **202** of FIG. **2**, such that reference numbers offset by **300** from those of FIG. **2** can refer to like features. Interface **500** is shown for illustrative purposes and other arrangements of the data and controls for manipulating and viewing the data are contemplated.

AS neighbor graph **536** can include route registry information **538** for the given AS, a listing **540** of network prefixes originated by the given AS and an adjacency graph **542**. Listing **540** can be organized as a Classless Inter-Domain Routing (CIDR) tree so as to provide a view on the aggregation policy employed by the origin AS. The tree can be expanded or contracted by clicking-on/selecting icons near the prefixes, as is common for such tree structures. Optionally, selecting one or more prefixes from listing **540** can result in displaying a listing of prefix tools available for selection by client **114**.

Adjacency graph **542** displays the specified AS (AS number **6830** for the exemplary interface **500**) in the middle of a star graph of neighbor ASes. The ASes can be color, or otherwise coded according to the number of AS-neighbors they have. Adjacency graph **542** can include upstream neighbors, downstream neighbors, or both, as selected by client **114**. Upstream neighbors can include those that appear closer to collection routers **108** in the ASPATH attributes of the BGP messages than the specified AS, while downstream neighbors are those that appear farther. Accordingly, upstream neighbors tend to be provider networks, while downstream neighbors tend to be customer networks, though other relationships between upstream/downstream neighbors can be contemplated. Optionally, selecting an AS from adjacency graph **542** can result in displaying AS neighbor graph **536** for the selected AS. Optionally, client **114** can choose, as indicated by tab **544**, to view the neighbor information in tabular format, where rows can indicate the most recent appearance of each neighborhood relation in BGP messages.

The methods and systems described herein optionally can stream routing data as described above and/or as otherwise obtained from additional analyses of data in database **112**, to client **114**. Generally, streaming can include providing reports (e.g., real-time) on the state and stability of global network BGP routing, delivered in XML format. Data can be periodically updated, with the time period for updating selected by client **114** and with sampling rates chosen to suit the data for display. Data streams can include the number of globally reachable network prefixes, intensity of route announcement and withdrawal message traffic, the number of unreachable networks, a route instability score, a distribution of route instability scores, geographic distribution of the number of unreachable networks, a listing of networks with the highest number of route changes across the set of peers **104***a*, **106***a*, a listing of ASes with the largest numbers or originated unstable networks, and other data as client **114** can request from database **112**.

The number of globally reachable network prefixes can be based on default-free routing table sizes over the selected time period. The intensity can be indicative of the total routing message traffic over the selected time period. The number of unreachable networks can track the number of networks that are estimated to be temporarily unreachable, conditioned on their prior reachability to correct for normal levels of network arrival and departure process due to economic and engineering activities. The route instability score can track the population of unstable routes by applying an instability score to the routes to each network prefix. The per-prefix instability scores can be computed cumulatively over time and suppressed following route stabilization.

The distribution of the instability scores can include a set of vectorial metrics representing the breakdown of route instabilities according to their severity and network prefix size. The geographical distribution can permit geographic localization of the impact of connectivity failures. The listings of unstable networks and unstable ASes can also assist in monitoring and resolution of connectivity failures.

Both the data representation described previously and the streaming data representation can include monitoring for and/or providing routing alarms for alerting client **114** to potential and/or actual routing events. Alarms can provide a capability for network problem detection and diagnosis that can lower the cost of day-to-day network operations. Routing alarms can be organized hierarchically. The alarms at the bottom of the hierarchy can be referred to as atomic alarms, which fire when the routes to a given network prefix are observed to change in defined ways, as will be described herein. For example, one can configure atomic alarms that fire when the prefix becomes unreachable from at least a certain threshold number of peers **104***a*, **106***a*, or when a route to the prefix with an unauthorized origin AS is announced by a peer **104***a*, **106***a*. In addition, the systems and methods described herein can be configured to generate SNMP traps for collection and correlation by a remote network management system in response to atomic alarms.

A hierarchy of alarms above the atomic alarms can be referred to as composite alarms, or alarm groups, which summarize the status of a set of alarms. Composite alarms can include prefix alarms, which can combine two subsets of alarms: (1) a set of atomic alarms for the prefix (P) itself; and (2), recursively, the set of prefix alarms for the client-approved more-specific network prefixes contained within P. The latter set can be empty if there are no approved more-specifics for P. At the time of prefix alarm configuration, the methods and systems described herein can initialize the list of more-specifics and the list of origin ASes on the basis of the analysis of the BGP UPDATEs received from peers **104***a*, **106***a* over a preceding time period, e.g., four weeks. The generated lists can be edited by client **114**.

Composite alarms can further include AS alarms, whose components can include prefix alarms for prefixes originated by a given AS. When an AS alarm for a given AS is being configured, the methods and systems described herein can initialize the list of prefixes originated by the AS on the basis of the analysis of BGP UPDATEs received from peers **104***a*, **106***a* over the preceding time period. The list can be edited by client **114** by adding and deleting prefixes. Other composite alarms can be custom configured by grouping existing prefix alarms and/or composite alarms, which can reflect organizational ownership of networks, their physical location, and/or their strategic importance.

The alarms can be operated in various modes, including a real-time mode and an historical mode. In real-time mode, alarms can be computed in response to BGP UPDATE messages as soon as the messages arrive from peers **104***a*, **106***a*. In historical mode, alarms can be computed from the archived BGP UPDATE in database **112**, beginning at a start time selected using the time navigation tools described previously. The historical mode can provide for "time travel", allowing a user to view how past routing events could have been detected by the configured alarms to fine-tune alarm configuration parameters. Further, the historical mode can be helpful in forensic analysis, where alarms can be configured to fire on specified events.

As noted, atomic alarms can be characterized by a single primary prefix P, and a trigger condition. For certain trigger conditions, an atomic alarm can additionally be characterized by a list of approved more specific prefixes, or a list of approved origin ASes for the prefix P. BGP messages for peers **104***a*, **106***a* can be analyzed by analysis server **110** to determine an alarm state, or condition for peers. Various alarms types can trigger atomic alarms based on the BGP UPDATEs received. Alarm types can include those shown in Table 1, though those of skill in the art can contemplate additional types of alarms. For each alarm type, there can be a corresponding peer alarm condition type.

TABLE 1

Alarm name	Alarm description
ADVERTISED	Prefix P was advertised.
CHANGED	Prefix P was advertised with one or more different attributes, or withdrawn.
DEGRADED	Prefix P was advertised with a longer ASPATH, or withdrawn.
WITHDRAWN	Prefix P was withdrawn.
UNREACHABLE	Prefix P was withdrawn, and there is no route to any less specific prefix for P from the same peer.
DEAGGREGATION	An unauthorized more-specific prefix P' was advertised; that is, a prefix that is more specific than P but not on the approved list of more-specifics.
ORIGIN	Prefix P was advertised as originated by an unauthorized AS, or an AS advertised an unauthorized prefix P.

FIG. **6** illustrates a method **600** by which analysis server **110** can set condition states for a prefix P based on BGP UPDATE messages received. Analysis server **110** of FIG. **1** can receive **602** an UPDATE message and can determine **604** the prefix P, or a more or less specific prefix, contained in the Network Layer Reachability Information (NLRI) field of the UPDATE message. Analysis server **100** can set or clear condition states for the conditions shown in Table 1 for the determined prefix. FIG. **6** provides an exemplary method for setting and/or clearing the condition states, though actions shown therein can be otherwise combined, separated, interchanged, and/or rearranged with more or fewer actions by those of skill in the art without departing from the disclosed method.

The exemplary method **600** of FIG. **6** can determine if the prefix P is ADVERTISED **606**. If it is, the ADVERTISED state is set to high and the WITHDRAWN and UNREACHABLE states are cleared **608**, as applicable. If the prefix P was advertised with one or more different attributes, as determined at **610**, then the CHANGED state is set to high **612**. If the prefix P was advertised with a longer ASPATH, as determined at **614**, then the DEGRADED state is set to high **616**. If a prefix that is more specific than P but not on the approved list of more-specifics was advertised, as determined at **618**, then the DEAGGREGATION state is set to high **620**. If prefix P was advertised as originated by an unauthorized AS, or an AS advertised an unauthorized prefix, as determined at **622**, then the ORIGIN state is set to high **624**. If the conditions

determined at **610**, **614**, **618**, or **622** are not met, then the CHANGED state, the DEGRADED state, the DEAGGREGATION state, or the ORIGIN state are cleared, as applicable at **626**, **628**, **630**, or **632**, respectively, and method **600** can proceed to correlation of the condition states, as indicated at "A".

If the prefix P is WITHDRAWN, as determined at **606**, then the WITHDRAWN, CHANGED, and DEGRADED states can be set to high, and the ADVERTISED, DEAGGREGATION, and ORIGIN states can be cleared, as applicable at **634**. If there is no route to any less specific prefix P from the same peer, as determined at **636**, then the UNREACHABLE state can be set to high **638**. If there is a route, then the UNREACHABLE state can be cleared **640**, as applicable, and method **600** can proceed to correlation of the condition states, as indicated at "A". The following examples can illustrate the setting of condition states.

In a first example, a BGP UPDATE is received **602** from peer **0** and is determined **604** to be for prefix 192.168.0.0/16. The message is determined **606** to contain a withdrawal, and the WITHDRAWN, CHANGED and DEGRADED condition states are set to high, while the ADVERTISED, DEAGGREGATION and ORIGIN condition states are cleared at **634**, as applicable. For this example, peer **0** previously had a valid route to 192.168.0.0/16, but there is no route to a less-specific prefix for P from the same peer, and the UNREACHABLE condition state is set to high. If a subsequent BGP UPDATE is received from the same peer with an advertisement of a route to 192.168.0.0/16, then the WITHDRAWN and UNREACHABLE condition states can be cleared, as at **608**.

In a second example, a BGP UPDATE from peer **0** contains a withdrawal for prefix 192.168.12.0/24. As previously, the WITHDRAWN, CHANGED and DEGRADED condition states are set to high, while the ADVERTISED, DEAGGREGATION and ORIGIN condition states are cleared at **634**, as applicable. For this example, peer **0** previously had valid routes to both 192.168.0.0/16 and 192.168.0.0/24. Because the route to 192.168.0.0/16 still exists, the more-specific is not entirely unreachable, and the UNREACHABLE condition state is cleared at **640**, as applicable.

FIG. **7** illustrates a method **700** that can trigger atomic alarms based on the condition states determined in method **600**. Method **700** can start at "A" and determine **702** if one or more of the alarm condition states from method **600** are set to high. An alarm condition state that is set to high can also be referred to herein as an alarm condition that has fired, or conversely, when an alarm condition fires, the alarm condition state is set to high. For each alarm condition that has fired, method **700** can examine the cumulative history of firings to determine whether temporal and/or spatial correlation criteria have been met.

The peer alarm condition states can be time stamped when fired (when the alarm condition state is set to high). Further, a client configurable "minimum" and "maximum" hold time can be associated with one or more alarm conditions. If the time since firing the alarm condition is at least equal to the minimum hold time, but not longer than the maximum hold time, the temporal correlation criteria is met, as determined at **704**. Generally, the minimum hold time can default to zero, such that an alarm condition is reported upon firing. Also, the maximum hold time can default to infinity, such that there is no maximum hold time.

Each peer alarm condition can also include a client configurable peer diversity threshold, which can indicate a minimum number of peer condition alarms for triggering an atomic alarm. If the number of peer condition alarms fired for a given alarm condition exceeds the diversity threshold, as determined at **706**, the spatial correlation criteria is met. Requiring a threshold number of peer alarm conditions to be met can reduce "noise" signals that may be due to one or a small number of peers and that may not reflect the behavior of routes seem by the majority of routers. The diversity threshold can be configured to encompass geographically separated routers and/or a threshold number of routers. For example, the diversity threshold can be configured to require that the threshold number of peer conditions are spread over a geographic region, rather than being concentrated at a single geographic location.

If either the temporal and spatial correlation criteria is met for a given alarm condition, the associated atomic alarm can fire **708**, or can be maintained in a firing state if the associated atomic alarm is already in a firing state. If both the temporal and spatial conditions are not met for a given alarm condition, the associated atomic alarm can be maintained in non-fired mode **710**, or can be made to "stand down" if the associated alarm is already in a firing state. When an atomic alarm fires, an alert can be generated **712** and a log can be kept **714**. Similarly, a log entry can indicate when an alarm stands down. Method **700** can continue **716** to check for high condition states received from method **600**.

FIG. **8** illustrates optional further criteria that can be tracked for atomic alarms that have fired. In addition to the temporal and spatial correlation criteria of method **700**, the atomic alarms can be characterized by an alarm status. When an atomic alarm fires, method **800** of FIG. **8** can set the status of the alarm at a certain initial value, as indicated at **802**. A processing scheme can be applied to the alarm status, which can vary the alarm status over time **804**. The function-based alarm status can be determined periodically (e.g., every five seconds) **806**. When the processing-scheme-based alarm status meets a certain threshold, as determined at **808**, the alarm can stand down **810** and the event can be entered in the log **812**. In one embodiment, the processing scheme can be an exponential decay, with a half life as specified by client **114**, although other processing schemes can be used. For example, processing schemes can include a step function, where the alarm status can remain substantially constant over certain time intervals, and/or other processing schemes that can vary based on and/or over time.

In addition to the atomic alarms, the methods and systems described herein can support composite alarms, or alarm groups, as noted previously. The alarm groups can be predefined and/or can be configured by client **114**. Unlike the atomic alarms, alarm groups need not be event-driven. Rather, the alarm groups can combine the status of their constituent atomic alarms in defined ways to compute their own status. The composite alarms can be used as proxies for very large alarm sets to make efficient use of limited space for displaying alarms. The alarms menu of menu bar **204** in FIG. **2** can provide predefined alarm groups to facilitate hierarchy management, including the alarm groups indicated in Table 2.

TABLE 2

Alarm group name	Alarm group definition
SINGLE PREFIX ALARM	The group of supported atomic alarms for prefix P.
MORE-SPECIFIC ALARMS	The group of prefix P alarms for more-specific prefixes contained with a given prefix P.
AGGREGATE PREFIX ALARM	The group pf alarms for a given prefix P (single prefix alarms for P, together with prefix alarms for approved more-specifics).

TABLE 2-continued

Alarm group name	Alarm group definition
AUTONOMOUS SYSTEM ALARM	The group of prefix alarms for prefixes originated by a given autonomous system.
ROOT ALARM GROUP	The group of client alarms and alarm groups.

Alarm groups can compute their status based on the individual statuses of the alarms they contain. The processing scheme used to compute the status can be selectable by client **114**, according to the intended purpose of the group. Representative processing schemes can include, but are not necessarily limited to, a maximum scheme, an average scheme, and/or a weighted average scheme. For a group using an maximum scheme, the status can be computed as the highest and/or greatest status of the constituents of the group. For example, if a group of four alarms have individual computed statuses of {0.5, 0.2, 0.1, 0.0}, the status of the group as a whole would be the maximum=0.5. For a group using an average scheme, the status can be computed as the sum of the statuses of the constituents of the group divided by the number of constituents. For example, if a group of four alarms have individual computed statuses of {0.5, 0.2, 0.1, 0.0}, the average status would be (0.5+0.2+0.1)/4=0.2.

For a group using a weighted average scheme, the status can be computed by applying weights to the statuses of the constituents, adding the weighted statuses and dividing by the sum of the weights for normalization. The weights can be assigned by client **114**. For example, in a group of four alarms, the first of which is ten times more important than the others, client **114** can assign the weights {10, 1, 1, 1}. If, at some point these four alarms have statuses of {0.5, 0.2, 0.1, 0.0}, the alarm group as a whole would have status (10*0.5+1*0.2+1*0.1+1*0.0)/13=0.408. It is noted that an average scheme can include a special case of a weighted average scheme, where the weights are equal. A variety of weighting schemes can be used.

FIG. **9** illustrates an exemplary interface **900** for configuring and displaying graphical representations of alarm data to client **114** in window **920**, as chosen from Tools menu **922**, or Alarms menu **928**, with tool indicator **918** indicating a real-time alarm monitoring mode. Generally, interface **900** can correspond with interface **200** of FIG. **2**, having persistent window control framework **902** similar to window control framework **202** of FIG. **2**, such that reference numbers offset by **700** from those of FIG. **2** can refer to like features. Interface **900** is shown for illustrative purposes and other arrangements of the data and controls for manipulating and viewing the data are contemplated.

In the exemplary interface **900**, the configured alarms can be displayed as a tree structure **936** adjacent to graph **938** when the real-time or historical alarm tool is started from Tools menu **922** or Alarm menu **928**. Initially, tree structure **936** can display a line for each top-level prefix alarm, autonomous system alarm, or named alarm group. Client **114** can interactively expand the display to inspect the constituent alarms within the groups, down to the level of individual primitive (or atomic) alarms. Display of constituent alarms below the top level of tree structure **936** that are inactive, as well as alarms that have been manually disabled by client **114**, can be suppressed, or otherwise not shown, to make more efficient use of limited screen space. As they become active, these alarms can be shown in order.

The lines of graph **938** can correspond with adjacent lines of tree structure **936**. The lines of graph **938** can include status indicators **940** and plots **942** of alarm history for a time period as can be chosen using navigation buttons and/or tools **906**, **910**. Status indicators **940** can be colored, shaded, or otherwise distinguished to indicate various status levels. For real-time alarm monitoring, as illustrated in exemplary interface **900**, window **920** can be periodically updated with the latest alarm data as processed by analysis server **110**. Alarm data can be streamed similar to the streaming of routing data, as previously described, where client **114** can chose the update period using refresh selector **916**.

Plots **942** can include designations for uncorrelated peer alarm "set" and "clear" events, as described with relation to FIG. **6**. The designations can be colored, shaded, or otherwise distinguishable to indicate the type of event shown. The uncorrelated, low-level events can provide a good sense of the underlying routing activity contributing to changes in the evolving status of each alarm over the recent time period displayed. Set/clear indications or designations can "flow up" from constituent alarms to the alarm groups that contain them. Thus, the historical context plot for an alarm group can display the low-level set/clear events for its constituents, and its constituents' constituents, recursively.

The plot lines can show the current status of the atomic and composite alarms plotted over time. The plot lines can also be colored, shaded, or otherwise distinguished to indicate whether the alarm is an atomic alarm in alert status. When client **114** selects a given alarm from graph **938**, lower frame **944** of window **920** can display additional information about the selected alarm. Client **114** can inspect the detailed alerts, as described with relation to FIG. **7**, and/or the set/clear events, as described with relation to FIG. **6**, that generated the observed status. The alarm groups can fuse and/or otherwise combine the alerts and low-level events from their constituent alarms for display.

In addition to displaying alarm information, Alarms menu **928** can include tools for creating and/or editing alarms configurations. For example, a prefix alarm can be created by entering a primary prefix in standard dot-decimal notation (e.g., 10.1.2.0/24). The methods and systems described herein can search the prefix advertisement history data in database **112** over a predetermined time frame and identify less specific prefixes and more specific networks. Client **114** can choose to alarm on the less specific prefixes, and can use the more specific network information for pre-configuring the DEAGGREGATION alarm for the primary prefix, and for recursive incorporation in the aggregate prefix alarm, if desired.

For AS alarms, client **114** can enter the AS number and the methods and systems described herein can search the prefix advertisement history data in database **112** over a predetermined time frame and initialize a list of prefixes originated by the AS. Alarm configurations can be edited by choosing the alarm from the graph **938** and/or tree structure **936**, and selecting an edit tool.

The user interfaces that analysis server **110** can present to user **114**, including the exemplary user interfaces **200**, **300**, **400**, **500**, and **900** described herein, can include hyperlinks for navigating between various interfaces. For example, the AS numbers and addresses in the listing of leading origins of instability in FIG. **2** can include hyperlinks to respective interface **500** of FIG. **5** and interface **400** of FIG. **4**. By clicking-on/selecting ASN **7137** in the listing of FIG. **2**, the AS neighbor graph for ASN **7137**, similar to graph **536** of FIG. **5**, can be presented to user **114**. Other data from others of the user interfaces can be similarly hyperlinked to provide for navigating among the various interfaces, and thus providing user **114** with interactive querying capabilities.

It is clear that there are many ways to configure the system components, interfaces and methods described herein. The disclosed methods and systems can be deployed on convenient processor platforms, including network servers, personal and portable computers, and/or other processing platforms. Other platforms can be contemplated as processing capabilities improve, including personal digital assistants, computerized watches, cellular phones and/or other portable devices. The disclosed methods and systems can be integrated with known network management systems and methods. The disclosed methods and systems can operate as an SNMP agent, and can be configured with the IP address of a remote machine running a conformant management platform. Therefore, the scope of the disclosed methods and systems are not limited by the examples given herein, but can include the full scope of the claims and their legal equivalents.

The methods and systems described herein are not limited to a particular hardware or software configuration, and may find applicability in many computing or processing environments. The methods and systems can be implemented in hardware or software, or a combination of hardware and software. The methods and systems can be implemented in one or more computer programs, where a computer program can be understood to include one or more processor executable instructions. The computer program(s) can execute on one or more programmable processors, and can be stored on one or more storage medium readable by the processor (including volatile and non-volatile memory and/or storage elements), one or more input devices, and/or one or more output devices. The processor thus can access one or more input devices to obtain input data, and can access one or more output devices to communicate output data. The input and/or output devices can include one or more of the following: Random Access Memory (RAM), Redundant Array of Independent Disks (RAID), floppy drive, CD, DVD, magnetic disk, internal hard drive, external hard drive, memory stick, or other storage device capable of being accessed by a processor as provided herein, where such aforementioned examples are not exhaustive, and are for illustration and not limitation.

The computer program(s) can be implemented using one or more high level procedural or object-oriented programming languages to communicate with a computer system; however, the program(s) can be implemented in assembly or machine language, if desired. The language can be compiled or interpreted.

As provided herein, the processor(s) can thus be embedded in one or more devices that can be operated independently or together in a networked environment, where the network can include, for example, a Local Area Network (LAN), wide area network (WAN), and/or can include an intranet and/or the Internet and/or another network. The network(s) can be wired or wireless or a combination thereof and can use one or more communications protocols to facilitate communications between the different processors. The processors can be configured for distributed processing and can utilize, in some embodiments, a client-server model as needed. Accordingly, the methods and systems can utilize multiple processors and/or processor devices, and the processor instructions can be divided amongst such single or multiple processor/devices.

The device(s) or computer systems that integrate with the processor(s) can include, for example, a personal computer (s), workstation (e.g., Sun, HP), personal digital assistant (PDA), handheld device such as cellular telephone, laptop, handheld, or another device capable of being integrated with a processor(s) that can operate as provided herein. Accordingly, the devices provided herein are not exhaustive and are provided for illustration and not limitation.

References to "a microprocessor" and "a processor", or "the microprocessor" and "the processor," can be understood to include one or more microprocessors that can communicate in a stand-alone and/or a distributed environment(s), and can thus can be configured to communicate via wired or wireless communications with other processors, where such one or more processor can be configured to operate on one or more processor-controlled devices that can be similar or different devices. Use of such "microprocessor" or "processor" terminology can thus also be understood to include a central processing unit, an arithmetic logic unit, an application-specific integrated circuit (IC), and/or a task engine, with such examples provided for illustration and not limitation.

Furthermore, references to memory, unless otherwise specified, can include one or more processor-readable and accessible memory elements and/or components that can be internal to the processor-controlled device, external to the processor-controlled device, and/or can be accessed via a wired or wireless network using a variety of communications protocols, and unless otherwise specified, can be arranged to include a combination of external and internal memory devices, where such memory can be contiguous and/or partitioned based on the application. Accordingly, references to a database can be understood to include one or more memory associations, where such references can include commercially available database products (e.g., SQL, Informix, Oracle) and also proprietary databases, and may also include other structures for associating memory such as links, queues, graphs, trees, with such structures provided for illustration and not limitation.

References to a network are not limited to the full Internet, and can include portions thereof. References herein to microprocessor instructions or microprocessor-executable instructions, in accordance with the above, can be understood to include programmable hardware.

Unless otherwise stated, use of the word "substantially" can be construed to include a precise relationship, condition, arrangement, orientation, and/or other characteristic, and deviations thereof as understood by one of ordinary skill in the art, to the extent that such deviations do not materially affect the disclosed methods and systems. Further, references herein to real-time can be understood to be abbreviations for "substantially in real-time." Although the illustrated embodiments of the methods and systems refer to certain aspects being in "real-time," such aspects may be provided in other manners.

Throughout the entirety of the present disclosure, use of the articles "a" or "an" to modify a noun can be understood to be used for convenience and to include one, or more than one of the modified noun, unless otherwise specifically stated.

Although the methods and systems have been described relative to specific embodiments thereof, they are not so limited. Obviously many modifications and variations may become apparent in light of the above teachings.

Many additional changes in the details, materials, and arrangement of parts, herein described and illustrated, can be made by those skilled in the art. Accordingly, it will be understood that the methods and systems provided herein are not to be limited to the embodiments disclosed herein, can include practices otherwise than specifically described, and are to be interpreted as broadly as allowed under the law.

What is claimed is:

1. A method of mapping network stability, comprising:

receiving BGP updates from routers in a plurality of autonomous networks of a network wherein the BGP updates comprise one or more of a BGP announcement, announcing a feasible route to a destination, and a BGP

withdrawal, announcing a withdrawal of a previously announced feasible route to the destination;

based at least in part on the BGP updates, determining, for at least one of the routers, at least one of a BGP announcement rate and a BGP withdrawal rate, each of the announcement and withdrawal rates relating, in part, to a number of feasible routes to the destination during a time frame, and the at least one of the determined BGP announcement and withdrawal rates being used to compute a network stability metric; and

based on the at least one of the determined BGP announcement rate and BGP withdrawal rate for the at least one router updating (i) a map of the network, the map comprising the feasible routes, and (ii) a database comprising a global routing table for the plurality of autonomous networks.

2. The method of claim **1**, wherein the global routing table includes route information for at least one autonomous network based on BGP updates from route neighbors of the at least one autonomous network.

3. The method of claim **1**, wherein determining for the at least one router at least one of a BGP announcement rate and a BGP withdrawal rate includes determining one of the plurality of autonomous networks that includes the at least one router.

4. The method of claim **1**, wherein each of the announcement and withdrawal rates relates to a rate at which the number of feasible paths to the destination is changing.

5. The method of claim **1**, wherein updating the global routing table comprises indicating, based on the at least one of the determined BGP announcement rate and BGP withdrawal rate, a number of distinct routable destinations during the time frame.

6. The method of claim **1**, wherein the network stability metric comprises at least one of a number of BGP announcements, a number of BGP withdrawals, a number of unreachable networks, a number of blackhole attacks, a size of the global routing table, or a listing of leading origins of instability.

7. A computer-implemented method of mapping network stability comprising:

receiving BGP updates from routers that exchange BGP updates with a plurality of autonomous networks of a network;

obtaining from the BGP updates at least one of a BGP announcement, announcing a feasible route to a destination, and a BGP withdrawal, announcing a withdrawal of a previously announced feasible route to the destination;

determining, for at least one autonomous network of the plurality of autonomous networks, at least one of a BGP announcement rate and a BGP withdrawal rate, each of the announcement and withdrawal rates relating, in part, to a number of feasible routes to the destination during a time frame, and the at least one of the determined BGP announcement and withdrawal rates being used to compute a network stability metric; and

based on at least one of the determined BGP announcement rate and BGP withdrawal rate for the at least one autonomous network, updating (i) a map of the network, the map comprising the feasible routes, and (ii) a database comprising a global routing table for the plurality of autonomous networks.

8. The method of claim **7**, wherein the global routing table includes route information for at least one autonomous network based on BGP updates from route neighbors of the at least one autonomous network.

9. The method of claim **7**, wherein determining, for the at least one autonomous network, at least one of a BGP announcement rate and a BGP withdrawal rate includes determining a BGP announcement rate or a BGP withdrawal rate for at least one router in the at least one autonomous network.

10. The method of claim **7**, wherein each of the announcement and withdrawal rates relates to a rate at which the number of feasible paths to the destination is changing.

11. The method of claim **7**, wherein updating the global routing table comprises indicating, based on the at least one of the determined BGP announcement rate and BGP withdrawal rate, a number of distinct routable destinations during the time frame.

12. The method of claim **7**, wherein the network stability metric comprises at least one of a number of BGP announcements, a number of BGP withdrawals, a number of unreachable networks, a number of blackhole attacks, a size of the global routing table, or a listing of leading origins of instability.

* * * * *