(12) INTERNATIONAL APPLICATION PUBLISHED UNDER THE PATENT COOPERATION TREATY (PCT)

(19) World Intellectual Property Organization
International Bureau

(43) International Publication Date
20 April 2023 (20.04.2023)

WIPO | PCT

(10) International Publication Number
WO 2023/064580 A1

(51) International Patent Classification:
H04N 23/62 (2023.01) *H04N 23/63* (2023.01)
G06F 3/048 (2006.01) *H04N 23/667* (2023.01)

(21) International Application Number:
PCT/US2022/046752

(22) International Filing Date:
14 October 2022 (14.10.2022)

(25) Filing Language: English

(26) Publication Language: English

(30) Priority Data:
63/255,654 14 October 2021 (14.10.2021) US
17/960,695 05 October 2022 (05.10.2022) US

(71) Applicant: **APPLE INC.** [US/US]; One Apple Park Way, Cupertino, California 95014 (US).

(72) Inventors: **MANZARI, Behkish J.**; c/o Apple Inc., One Apple Park Way, Cupertino, California 95014 (US). **BRASKET, Jeffrey A.**; c/o Apple Inc., One Apple Park Way, Cupertino, California 95014 (US). **COREY, Brandon J.**; c/o Apple Inc., One Apple Park Way, Cupertino, California 95014 (US).

(81) Designated States *(unless otherwise indicated, for every kind of national protection available)*: AE, AG, AL, AM, AO, AT, AU, AZ, BA, BB, BG, BH, BN, BR, BW, BY, BZ, CA, CH, CL, CN, CO, CR, CU, CV, CZ, DE, DJ, DK, DM, DO, DZ, EC, EE, EG, ES, FI, GB, GD, GE, GH, GM, GT, HN, HR, HU, ID, IL, IN, IQ, IR, IS, IT, JM, JO, JP, KE, KG, KH, KN, KP, KR, KW, KZ, LA, LC, LK, LR, LS, LU, LY, MA, MD, MG, MK, MN, MW, MX, MY, MZ, NA, NG, NI, NO, NZ, OM, PA, PE, PG, PH, PL, PT, QA, RO, RS, RU, RW, SA, SC, SD, SE, SG, SK, SL, ST, SV, SY, TH, TJ, TM, TN, TR, TT, TZ, UA, UG, US, UZ, VC, VN, WS, ZA, ZM, ZW.

(84) Designated States *(unless otherwise indicated, for every kind of regional protection available)*: ARIPO (BW, CV, GH, GM, KE, LR, LS, MW, MZ, NA, RW, SD, SL, ST, SZ, TZ, UG, ZM, ZW), Eurasian (AM, AZ, BY, KG, KZ, RU, TJ, TM), European (AL, AT, BE, BG, CH, CY, CZ, DE, DK, EE, ES, FI, FR, GB, GR, HR, HU, IE, IS, IT, LT, LU, LV, MC, ME, MK, MT, NL, NO, PL, PT, RO, RS, SE, SI,

(54) Title: CAMERA USER INTERFACE WITH RECORDING SPACE MANAGEMENT

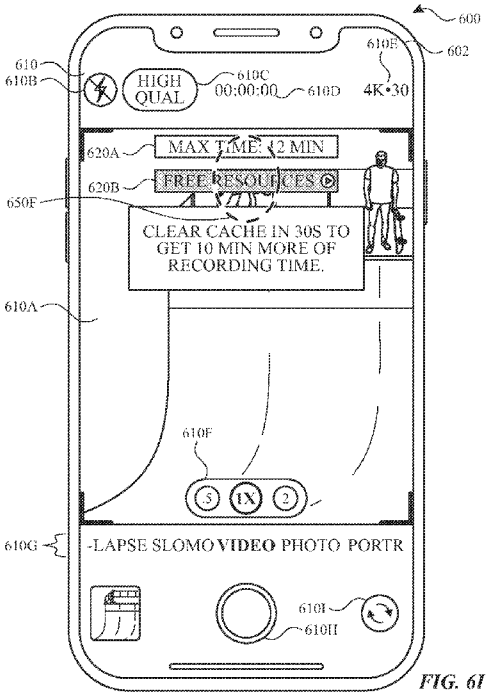

FIG. 6I

(57) Abstract: The present disclosure generally relates to user interfaces for managing recording space for visual media. A computer system displays a camera preview and a recording space affordance that, when selected, initiates performing an operation associated with recording space available for recording media captured by the one or more cameras.

WO 2023/064580 A1

[Continued on next page]

SK, SM, TR), OAPI (BF, BJ, CF, CG, CI, CM, GA, GN, GQ, GW, KM, ML, MR, NE, SN, TD, TG).

Published:

— *with international search report (Art. 21(3))*

CAMERA USER INTERFACE WITH RECORDING SPACE MANAGEMENT

CROSS-REFERENCE TO RELATED APPLICATIONS

[0001] This application claims priority to U.S. Patent Application 17/960,695, entitled "CAMERA USER INTERFACE WITH RECORDING SPACE MANAGEMENT," filed October 5, 2022, and to U.S. Provisional Patent Application 63/255,654, entitled "CAMERA USER INTERFACE WITH RECORDING SPACE MANAGEMENT," filed October 14, 2021. The contents of each of these applications are incorporated herein by reference in their entireties.

FIELD

[0002] The present disclosure relates generally to computer user interfaces, and more specifically to techniques for managing recording space for visual media.

BACKGROUND

[0003] Computer systems store files in memory, such as video files recorded using a camera. Memory is limited and files that are larger than the available memory cannot be stored.

BRIEF SUMMARY

[0004] Some techniques for managing recording space for visual media using electronic devices, however, are generally cumbersome and inefficient. For example, some existing techniques use a complex and time-consuming user interface, which may include multiple key presses or keystrokes. For example, some existing techniques require a user to provide inputs to transition from a camera interface to access a different interface to see memory usage/availability information, provide additional inputs to access an interface for deleting files, whereby the user provides additional inputs to identify which files should be deleted, and then providing inputs to transition back to the camera interface. Existing techniques require more time than necessary, wasting user time and device energy. This latter consideration is particularly important in battery-operated devices.

[0005] Accordingly, the present technique provides electronic devices with faster, more efficient methods and interfaces for managing recording space for visual media. Such

methods and interfaces optionally complement or replace other methods for managing recording space for visual media. The present methods and interfaces reduce the cognitive burden on a user and produce a more efficient human-machine interface. For battery-operated computing devices, such methods and interfaces conserve power and increase the time between battery charges.

[0006] In accordance with some embodiments, a method performed at a computer system having one or more cameras, wherein the computer system is in communication with a display generation component and one or more input devices, is described. The method comprises: displaying, via the display generation component, a camera user interface, wherein displaying the camera user interface includes concurrently displaying: a camera preview that includes a representation of one or more objects in a field-of-view of a first camera of the one or more cameras; and a recording space affordance that, when selected, initiates performing an operation associated with recording space available for recording media captured by the one or more cameras; receiving, via the one or more input devices, input corresponding to selection of the recording space affordance; and in response to receiving the input corresponding to selection of the recording space affordance, performing the operation associated with changing an amount of recording space available for recording media captured by the one or more cameras.

[0007] In accordance with some embodiments, a non-transitory computer-readable storage medium storing one or more programs configured to be executed by one or more processors of a computer system having one or more cameras and that is in communication with a display generation component and one or more input devices is described. The one or more programs including instructions for: displaying, via the display generation component, a camera user interface, wherein displaying the camera user interface includes concurrently displaying: a camera preview that includes a representation of one or more objects in a field-of-view of a first camera of the one or more cameras; and a recording space affordance that, when selected, initiates performing an operation associated with recording space available for recording media captured by the one or more cameras; receiving, via the one or more input devices, input corresponding to selection of the recording space affordance; and in response to receiving the input corresponding to selection of the recording space affordance, performing the operation associated with changing an amount of recording space available for recording media captured by the one or more cameras.

[0008] In accordance with some embodiments, a transitory computer-readable storage medium storing one or more programs configured to be executed by one or more processors of a computer system having one or more cameras and that is in communication with a display generation component and one or more input devices is described. The one or more programs including instructions for: displaying, via the display generation component, a camera user interface, wherein displaying the camera user interface includes concurrently displaying: a camera preview that includes a representation of one or more objects in a field-of-view of a first camera of the one or more cameras; and a recording space affordance that, when selected, initiates performing an operation associated with recording space available for recording media captured by the one or more cameras; receiving, via the one or more input devices, input corresponding to selection of the recording space affordance; and in response to receiving the input corresponding to selection of the recording space affordance, performing the operation associated with changing an amount of recording space available for recording media captured by the one or more cameras.

[0009] In accordance with some embodiments, a computer system having one or more cameras and that is configured to communicate with a display generation component and one or more input devices is described. The computer system includes one or more processors; and memory storing one or more programs configured to be executed by the one or more processors. The one or more programs including instructions for: displaying, via the display generation component, a camera user interface, wherein displaying the camera user interface includes concurrently displaying: a camera preview that includes a representation of one or more objects in a field-of-view of a first camera of the one or more cameras; and a recording space affordance that, when selected, initiates performing an operation associated with recording space available for recording media captured by the one or more cameras; receiving, via the one or more input devices, input corresponding to selection of the recording space affordance; and in response to receiving the input corresponding to selection of the recording space affordance, performing the operation associated with changing an amount of recording space available for recording media captured by the one or more cameras.

[0010] In accordance with some embodiments, a computer system having one or more cameras and that is configured to communicate with a display generation component and one or more input devices is described. The computer system includes means for displaying, via the display generation component, a camera user interface, wherein displaying the camera

user interface includes concurrently displaying: a camera preview that includes a representation of one or more objects in a field-of-view of a first camera of the one or more cameras; and a recording space affordance that, when selected, initiates performing an operation associated with recording space available for recording media captured by the one or more cameras; means for receiving, via the one or more input devices, input corresponding to selection of the recording space affordance; and means for, in response to receiving the input corresponding to selection of the recording space affordance, performing the operation associated with changing an amount of recording space available for recording media captured by the one or more cameras.

[0011] In accordance with some embodiments, a computer program product, comprising one or more programs configured to be executed by one or more processors of a computer system having one or more cameras and that is in communication with a display generation component and one or more input devices is described. The one or more programs including instructions for: displaying, via the display generation component, a camera user interface, wherein displaying the camera user interface includes concurrently displaying: a camera preview that includes a representation of one or more objects in a field-of-view of a first camera of the one or more cameras; and a recording space affordance that, when selected, initiates performing an operation associated with recording space available for recording media captured by the one or more cameras; receiving, via the one or more input devices, input corresponding to selection of the recording space affordance; and in response to receiving the input corresponding to selection of the recording space affordance, performing the operation associated with changing an amount of recording space available for recording media captured by the one or more cameras.

[0012] Executable instructions for performing these functions are, optionally, included in a non-transitory computer-readable storage medium or other computer program product configured for execution by one or more processors. Executable instructions for performing these functions are, optionally, included in a transitory computer-readable storage medium or other computer program product configured for execution by one or more processors.

[0013] Thus, devices are provided with faster, more efficient methods and interfaces for managing recording space for visual media, thereby increasing the effectiveness, efficiency, and user satisfaction with such devices. Such methods and interfaces may complement or replace other methods for managing recording space for visual media.

DESCRIPTION OF THE FIGURES

[0014] For a better understanding of the various described embodiments, reference should be made to the Description of Embodiments below, in conjunction with the following drawings in which like reference numerals refer to corresponding parts throughout the figures.

[0015] FIG. 1A is a block diagram illustrating a portable multifunction device with a touch-sensitive display in accordance with some embodiments.

[0016] FIG. 1B is a block diagram illustrating exemplary components for event handling in accordance with some embodiments.

[0017] FIG. 2 illustrates a portable multifunction device having a touch screen in accordance with some embodiments.

[0018] FIG. 3 is a block diagram of an exemplary multifunction device with a display and a touch-sensitive surface in accordance with some embodiments.

[0019] FIG. 4A illustrates an exemplary user interface for a menu of applications on a portable multifunction device in accordance with some embodiments.

[0020] FIG. 4B illustrates an exemplary user interface for a multifunction device with a touch-sensitive surface that is separate from the display in accordance with some embodiments.

[0021] FIG. 5A illustrates a personal electronic device in accordance with some embodiments.

[0022] FIG. 5B is a block diagram illustrating a personal electronic device in accordance with some embodiments.

[0023] FIGS. 6A-6R illustrate exemplary user interfaces for managing memory, in accordance with some embodiments.

[0024] FIG. 7 is a flow diagram illustrating a method for managing memory, in accordance with some embodiments.

DESCRIPTION OF EMBODIMENTS

[0025] The following description sets forth exemplary methods, parameters, and the like. It should be recognized, however, that such description is not intended as a limitation on the scope of the present disclosure but is instead provided as a description of exemplary embodiments.

[0026] There is a need for electronic devices that provide efficient methods and interfaces for managing memory. Appropriate memory management enables the electronic device to use memory more efficiently, provides the user with feedback about the availability memory, and reduces the need for users to provide inputs to manage memory. Such techniques can reduce the cognitive burden on a user who use electronic devices, thereby enhancing productivity. Further, such techniques can reduce processor and battery power otherwise wasted on redundant user inputs.

[0027] Below, FIGS. 1A-1B, 2, 3, 4A-4B, and 5A-5B provide a description of exemplary devices for performing the techniques for managing event notifications. FIGS. 6A-6R illustrate exemplary user interfaces for managing memory, in accordance with some embodiments. FIG. 7 is a flow diagram illustrating a method for managing memory, in accordance with some embodiments. The user interfaces in FIGS. 6A-6R are used to illustrate the processes described below, including the processes in FIG. 7.

[0028] The processes described below enhance the operability of the devices and make the user-device interfaces more efficient (e.g., by helping the user to provide proper inputs and reducing user mistakes when operating/interacting with the device) through various techniques, including by providing improved visual feedback to the user, reducing the number of inputs needed to perform an operation, providing additional control options without cluttering the user interface with additional displayed controls, performing an operation when a set of conditions has been met without requiring further user input, and/or additional techniques. These techniques also reduce power usage and improve battery life of the device by enabling the user to use the device more quickly and efficiently.

[0029] In addition, in methods described herein where one or more steps are contingent upon one or more conditions having been met, it should be understood that the described method can be repeated in multiple repetitions so that over the course of the repetitions all of the conditions upon which steps in the method are contingent have been met in different

repetitions of the method. For example, if a method requires performing a first step if a condition is satisfied, and a second step if the condition is not satisfied, then a person of ordinary skill would appreciate that the claimed steps are repeated until the condition has been both satisfied and not satisfied, in no particular order. Thus, a method described with one or more steps that are contingent upon one or more conditions having been met could be rewritten as a method that is repeated until each of the conditions described in the method has been met. This, however, is not required of system or computer readable medium claims where the system or computer readable medium contains instructions for performing the contingent operations based on the satisfaction of the corresponding one or more conditions and thus is capable of determining whether the contingency has or has not been satisfied without explicitly repeating steps of a method until all of the conditions upon which steps in the method are contingent have been met. A person having ordinary skill in the art would also understand that, similar to a method with contingent steps, a system or computer readable storage medium can repeat the steps of a method as many times as are needed to ensure that all of the contingent steps have been performed.

[0030] Although the following description uses terms "first," "second," etc. to describe various elements, these elements should not be limited by the terms. In some embodiments, these terms are used to distinguish one element from another. For example, a first touch could be termed a second touch, and, similarly, a second touch could be termed a first touch, without departing from the scope of the various described embodiments. In some embodiments, the first touch and the second touch are two separate references to the same touch. In some embodiments, the first touch and the second touch are both touches, but they are not the same touch.

[0031] The terminology used in the description of the various described embodiments herein is for the purpose of describing particular embodiments only and is not intended to be limiting. As used in the description of the various described embodiments and the appended claims, the singular forms "a," "an," and "the" are intended to include the plural forms as well, unless the context clearly indicates otherwise. It will also be understood that the term "and/or" as used herein refers to and encompasses any and all possible combinations of one or more of the associated listed items. It will be further understood that the terms "includes," "including," "comprises," and/or "comprising," when used in this specification, specify the presence of stated features, integers, steps, operations, elements, and/or components, but do

not preclude the presence or addition of one or more other features, integers, steps, operations, elements, components, and/or groups thereof.

[0032] The term "if" is, optionally, construed to mean "when" or "upon" or "in response to determining" or "in response to detecting," depending on the context. Similarly, the phrase "if it is determined" or "if [a stated condition or event] is detected" is, optionally, construed to mean "upon determining" or "in response to determining" or "upon detecting [the stated condition or event]" or "in response to detecting [the stated condition or event]," depending on the context.

[0033] Embodiments of electronic devices, user interfaces for such devices, and associated processes for using such devices are described. In some embodiments, the device is a portable communications device, such as a mobile telephone, that also contains other functions, such as PDA and/or music player functions. Exemplary embodiments of portable multifunction devices include, without limitation, the iPhone®, iPod Touch®, and iPad® devices from Apple Inc. of Cupertino, California. Other portable electronic devices, such as laptops or tablet computers with touch-sensitive surfaces (e.g., touch screen displays and/or touchpads), are, optionally, used. It should also be understood that, in some embodiments, the device is not a portable communications device, but is a desktop computer with a touch-sensitive surface (e.g., a touch screen display and/or a touchpad). In some embodiments, the electronic device is a computer system that is in communication (e.g., via wireless communication, via wired communication) with a display generation component. The display generation component is configured to provide visual output, such as display via a CRT display, display via an LED display, or display via image projection. In some embodiments, the display generation component is integrated with the computer system. In some embodiments, the display generation component is separate from the computer system. As used herein, "displaying" content includes causing to display the content (e.g., video data rendered or decoded by display controller 156) by transmitting, via a wired or wireless connection, data (e.g., image data or video data) to an integrated or external display generation component to visually produce the content.

[0034] In the discussion that follows, an electronic device that includes a display and a touch-sensitive surface is described. It should be understood, however, that the electronic device optionally includes one or more other physical user-interface devices, such as a physical keyboard, a mouse, and/or a joystick.

[0035] The device typically supports a variety of applications, such as one or more of the following: a drawing application, a presentation application, a word processing application, a website creation application, a disk authoring application, a spreadsheet application, a gaming application, a telephone application, a video conferencing application, an e-mail application, an instant messaging application, a workout support application, a photo management application, a digital camera application, a digital video camera application, a web browsing application, a digital music player application, and/or a digital video player application.

[0036] The various applications that are executed on the device optionally use at least one common physical user-interface device, such as the touch-sensitive surface. One or more functions of the touch-sensitive surface as well as corresponding information displayed on the device are, optionally, adjusted and/or varied from one application to the next and/or within a respective application. In this way, a common physical architecture (such as the touch-sensitive surface) of the device optionally supports the variety of applications with user interfaces that are intuitive and transparent to the user.

[0037] Attention is now directed toward embodiments of portable devices with touch-sensitive displays. FIG. 1A is a block diagram illustrating portable multifunction device 100 with touch-sensitive display system 112 in accordance with some embodiments. Touch-sensitive display 112 is sometimes called a "touch screen" for convenience and is sometimes known as or called a "touch-sensitive display system." Device 100 includes memory 102 (which optionally includes one or more computer-readable storage mediums), memory controller 122, one or more processing units (CPUs) 120, peripherals interface 118, RF circuitry 108, audio circuitry 110, speaker 111, microphone 113, input/output (I/O) subsystem 106, other input control devices 116, and external port 124. Device 100 optionally includes one or more optical sensors 164. Device 100 optionally includes one or more contact intensity sensors 165 for detecting intensity of contacts on device 100 (e.g., a touch-sensitive surface such as touch-sensitive display system 112 of device 100). Device 100 optionally includes one or more tactile output generators 167 for generating tactile outputs on device 100 (e.g., generating tactile outputs on a touch-sensitive surface such as touch-sensitive display system 112 of device 100 or touchpad 355 of device 300). These components optionally communicate over one or more communication buses or signal lines 103.

[0038] As used in the specification and claims, the term "intensity" of a contact on a touch-sensitive surface refers to the force or pressure (force per unit area) of a contact (e.g., a finger contact) on the touch-sensitive surface, or to a substitute (proxy) for the force or pressure of a contact on the touch-sensitive surface. The intensity of a contact has a range of values that includes at least four distinct values and more typically includes hundreds of distinct values (e.g., at least 256). Intensity of a contact is, optionally, determined (or measured) using various approaches and various sensors or combinations of sensors. For example, one or more force sensors underneath or adjacent to the touch-sensitive surface are, optionally, used to measure force at various points on the touch-sensitive surface. In some implementations, force measurements from multiple force sensors are combined (e.g., a weighted average) to determine an estimated force of a contact. Similarly, a pressure-sensitive tip of a stylus is, optionally, used to determine a pressure of the stylus on the touch-sensitive surface. Alternatively, the size of the contact area detected on the touch-sensitive surface and/or changes thereto, the capacitance of the touch-sensitive surface proximate to the contact and/or changes thereto, and/or the resistance of the touch-sensitive surface proximate to the contact and/or changes thereto are, optionally, used as a substitute for the force or pressure of the contact on the touch-sensitive surface. In some implementations, the substitute measurements for contact force or pressure are used directly to determine whether an intensity threshold has been exceeded (e.g., the intensity threshold is described in units corresponding to the substitute measurements). In some implementations, the substitute measurements for contact force or pressure are converted to an estimated force or pressure, and the estimated force or pressure is used to determine whether an intensity threshold has been exceeded (e.g., the intensity threshold is a pressure threshold measured in units of pressure). Using the intensity of a contact as an attribute of a user input allows for user access to additional device functionality that may otherwise not be accessible by the user on a reduced-size device with limited real estate for displaying affordances (e.g., on a touch-sensitive display) and/or receiving user input (e.g., via a touch-sensitive display, a touch-sensitive surface, or a physical/mechanical control such as a knob or a button).

[0039] As used in the specification and claims, the term "tactile output" refers to physical displacement of a device relative to a previous position of the device, physical displacement of a component (e.g., a touch-sensitive surface) of a device relative to another component (e.g., housing) of the device, or displacement of the component relative to a center of mass of the device that will be detected by a user with the user's sense of touch. For example, in

situations where the device or the component of the device is in contact with a surface of a user that is sensitive to touch (e.g., a finger, palm, or other part of a user's hand), the tactile output generated by the physical displacement will be interpreted by the user as a tactile sensation corresponding to a perceived change in physical characteristics of the device or the component of the device. For example, movement of a touch-sensitive surface (e.g., a touch-sensitive display or trackpad) is, optionally, interpreted by the user as a "down click" or "up click" of a physical actuator button. In some cases, a user will feel a tactile sensation such as an "down click" or "up click" even when there is no movement of a physical actuator button associated with the touch-sensitive surface that is physically pressed (e.g., displaced) by the user's movements. As another example, movement of the touch-sensitive surface is, optionally, interpreted or sensed by the user as "roughness" of the touch-sensitive surface, even when there is no change in smoothness of the touch-sensitive surface. While such interpretations of touch by a user will be subject to the individualized sensory perceptions of the user, there are many sensory perceptions of touch that are common to a large majority of users. Thus, when a tactile output is described as corresponding to a particular sensory perception of a user (e.g., an "up click," a "down click," "roughness"), unless otherwise stated, the generated tactile output corresponds to physical displacement of the device or a component thereof that will generate the described sensory perception for a typical (or average) user.

[0040] It should be appreciated that device 100 is only one example of a portable multifunction device, and that device 100 optionally has more or fewer components than shown, optionally combines two or more components, or optionally has a different configuration or arrangement of the components. The various components shown in FIG. 1A are implemented in hardware, software, or a combination of both hardware and software, including one or more signal processing and/or application-specific integrated circuits.

[0041] Memory 102 optionally includes high-speed random access memory and optionally also includes non-volatile memory, such as one or more magnetic disk storage devices, flash memory devices, or other non-volatile solid-state memory devices. Memory controller 122 optionally controls access to memory 102 by other components of device 100.

[0042] Peripherals interface 118 can be used to couple input and output peripherals of the device to CPU 120 and memory 102. The one or more processors 120 run or execute various software programs (such as computer programs (e.g., including instructions)) and/or sets of

instructions stored in memory 102 to perform various functions for device 100 and to process data. In some embodiments, peripherals interface 118, CPU 120, and memory controller 122 are, optionally, implemented on a single chip, such as chip 104. In some other embodiments, they are, optionally, implemented on separate chips.

[0043] RF (radio frequency) circuitry 108 receives and sends RF signals, also called electromagnetic signals. RF circuitry 108 converts electrical signals to/from electromagnetic signals and communicates with communications networks and other communications devices via the electromagnetic signals. RF circuitry 108 optionally includes well-known circuitry for performing these functions, including but not limited to an antenna system, an RF transceiver, one or more amplifiers, a tuner, one or more oscillators, a digital signal processor, a CODEC chipset, a subscriber identity module (SIM) card, memory, and so forth. RF circuitry 108 optionally communicates with networks, such as the Internet, also referred to as the World Wide Web (WWW), an intranet and/or a wireless network, such as a cellular telephone network, a wireless local area network (LAN) and/or a metropolitan area network (MAN), and other devices by wireless communication. The RF circuitry 108 optionally includes well-known circuitry for detecting near field communication (NFC) fields, such as by a short-range communication radio. The wireless communication optionally uses any of a plurality of communications standards, protocols, and technologies, including but not limited to Global System for Mobile Communications (GSM), Enhanced Data GSM Environment (EDGE), high-speed downlink packet access (HSDPA), high-speed uplink packet access (HSUPA), Evolution, Data-Only (EV-DO), HSPA, HSPA+, Dual-Cell HSPA (DC-HSPDA), long term evolution (LTE), near field communication (NFC), wideband code division multiple access (W-CDMA), code division multiple access (CDMA), time division multiple access (TDMA), Bluetooth, Bluetooth Low Energy (BTLE), Wireless Fidelity (Wi-Fi) (e.g., IEEE 802.11a, IEEE 802.11b, IEEE 802.11g, IEEE 802.11n, and/or IEEE 802.11ac), voice over Internet Protocol (VoIP), Wi-MAX, a protocol for e-mail (e.g., Internet message access protocol (IMAP) and/or post office protocol (POP)), instant messaging (e.g., extensible messaging and presence protocol (XMPP), Session Initiation Protocol for Instant Messaging and Presence Leveraging Extensions (SIMPLE), Instant Messaging and Presence Service (IMPS)), and/or Short Message Service (SMS), or any other suitable communication protocol, including communication protocols not yet developed as of the filing date of this document.

[0044] Audio circuitry 110, speaker 111, and microphone 113 provide an audio interface between a user and device 100. Audio circuitry 110 receives audio data from peripherals interface 118, converts the audio data to an electrical signal, and transmits the electrical signal to speaker 111. Speaker 111 converts the electrical signal to human-audible sound waves. Audio circuitry 110 also receives electrical signals converted by microphone 113 from sound waves. Audio circuitry 110 converts the electrical signal to audio data and transmits the audio data to peripherals interface 118 for processing. Audio data is, optionally, retrieved from and/or transmitted to memory 102 and/or RF circuitry 108 by peripherals interface 118. In some embodiments, audio circuitry 110 also includes a headset jack (e.g., 212, FIG. 2). The headset jack provides an interface between audio circuitry 110 and removable audio input/output peripherals, such as output-only headphones or a headset with both output (e.g., a headphone for one or both ears) and input (e.g., a microphone).

[0045] I/O subsystem 106 couples input/output peripherals on device 100, such as touch screen 112 and other input control devices 116, to peripherals interface 118. I/O subsystem 106 optionally includes display controller 156, optical sensor controller 158, depth camera controller 169, intensity sensor controller 159, haptic feedback controller 161, and one or more input controllers 160 for other input or control devices. The one or more input controllers 160 receive/send electrical signals from/to other input control devices 116. The other input control devices 116 optionally include physical buttons (e.g., push buttons, rocker buttons, etc.), dials, slider switches, joysticks, click wheels, and so forth. In some embodiments, input controller(s) 160 are, optionally, coupled to any (or none) of the following: a keyboard, an infrared port, a USB port, and a pointer device such as a mouse. The one or more buttons (e.g., 208, FIG. 2) optionally include an up/down button for volume control of speaker 111 and/or microphone 113. The one or more buttons optionally include a push button (e.g., 206, FIG. 2). In some embodiments, the electronic device is a computer system that is in communication (e.g., via wireless communication, via wired communication) with one or more input devices. In some embodiments, the one or more input devices include a touch-sensitive surface (e.g., a trackpad, as part of a touch-sensitive display). In some embodiments, the one or more input devices include one or more camera sensors (e.g., one or more optical sensors 164 and/or one or more depth camera sensors 175), such as for tracking a user's gestures (e.g., hand gestures and/or air gestures) as input. In some embodiments, the one or more input devices are integrated with the computer system. In some embodiments, the one or more input devices are separate from the computer system.

In some embodiments, an air gesture is a gesture that is detected without the user touching an input element that is part of the device (or independently of an input element that is a part of the device) and is based on detected motion of a portion of the user's body through the air including motion of the user's body relative to an absolute reference (e.g., an angle of the user's arm relative to the ground or a distance of the user's hand relative to the ground), relative to another portion of the user's body (e.g., movement of a hand of the user relative to a shoulder of the user, movement of one hand of the user relative to another hand of the user, and/or movement of a finger of the user relative to another finger or portion of a hand of the user), and/or absolute motion of a portion of the user's body (e.g., a tap gesture that includes movement of a hand in a predetermined pose by a predetermined amount and/or speed, or a shake gesture that includes a predetermined speed or amount of rotation of a portion of the user's body).

[0046] A quick press of the push button optionally disengages a lock of touch screen 112 or optionally begins a process that uses gestures on the touch screen to unlock the device, as described in U.S. Patent Application 11/322,549, "Unlocking a Device by Performing Gestures on an Unlock Image," filed December 23, 2005, U.S. Pat. No. 7,657,849, which is hereby incorporated by reference in its entirety. A longer press of the push button (e.g., 206) optionally turns power to device 100 on or off. The functionality of one or more of the buttons are, optionally, user-customizable. Touch screen 112 is used to implement virtual or soft buttons and one or more soft keyboards.

[0047] Touch-sensitive display 112 provides an input interface and an output interface between the device and a user. Display controller 156 receives and/or sends electrical signals from/to touch screen 112. Touch screen 112 displays visual output to the user. The visual output optionally includes graphics, text, icons, video, and any combination thereof (collectively termed "graphics"). In some embodiments, some or all of the visual output optionally corresponds to user-interface objects.

[0048] Touch screen 112 has a touch-sensitive surface, sensor, or set of sensors that accepts input from the user based on haptic and/or tactile contact. Touch screen 112 and display controller 156 (along with any associated modules and/or sets of instructions in memory 102) detect contact (and any movement or breaking of the contact) on touch screen 112 and convert the detected contact into interaction with user-interface objects (e.g., one or more soft keys, icons, web pages, or images) that are displayed on touch screen 112. In an

exemplary embodiment, a point of contact between touch screen 112 and the user corresponds to a finger of the user.

[0049] Touch screen 112 optionally uses LCD (liquid crystal display) technology, LPD (light emitting polymer display) technology, or LED (light emitting diode) technology, although other display technologies are used in other embodiments. Touch screen 112 and display controller 156 optionally detect contact and any movement or breaking thereof using any of a plurality of touch sensing technologies now known or later developed, including but not limited to capacitive, resistive, infrared, and surface acoustic wave technologies, as well as other proximity sensor arrays or other elements for determining one or more points of contact with touch screen 112. In an exemplary embodiment, projected mutual capacitance sensing technology is used, such as that found in the iPhone® and iPod Touch® from Apple Inc. of Cupertino, California.

[0050] A touch-sensitive display in some embodiments of touch screen 112 is, optionally, analogous to the multi-touch sensitive touchpads described in the following U.S. Patents: 6,323,846 (Westerman et al.), 6,570,557 (Westerman et al.), and/or 6,677,932 (Westerman), and/or U.S. Patent Publication 2002/0015024A1, each of which is hereby incorporated by reference in its entirety. However, touch screen 112 displays visual output from device 100, whereas touch-sensitive touchpads do not provide visual output.

[0051] A touch-sensitive display in some embodiments of touch screen 112 is described in the following applications: (1) U.S. Patent Application No. 11/381,313, "Multipoint Touch Surface Controller," filed May 2, 2006; (2) U.S. Patent Application No. 10/840,862, "Multipoint Touchscreen," filed May 6, 2004; (3) U.S. Patent Application No. 10/903,964, "Gestures For Touch Sensitive Input Devices," filed July 30, 2004; (4) U.S. Patent Application No. 11/048,264, "Gestures For Touch Sensitive Input Devices," filed January 31, 2005; (5) U.S. Patent Application No. 11/038,590, "Mode-Based Graphical User Interfaces For Touch Sensitive Input Devices," filed January 18, 2005; (6) U.S. Patent Application No. 11/228,758, "Virtual Input Device Placement On A Touch Screen User Interface," filed September 16, 2005; (7) U.S. Patent Application No. 11/228,700, "Operation Of A Computer With A Touch Screen Interface," filed September 16, 2005; (8) U.S. Patent Application No. 11/228,737, "Activating Virtual Keys Of A Touch-Screen Virtual Keyboard," filed September 16, 2005; and (9) U.S. Patent Application No. 11/367,749, "Multi-Functional

Hand-Held Device," filed March 3, 2006. All of these applications are incorporated by reference herein in their entirety.

[0052] Touch screen 112 optionally has a video resolution in excess of 100 dpi. In some embodiments, the touch screen has a video resolution of approximately 160 dpi. The user optionally makes contact with touch screen 112 using any suitable object or appendage, such as a stylus, a finger, and so forth. In some embodiments, the user interface is designed to work primarily with finger-based contacts and gestures, which can be less precise than stylus-based input due to the larger area of contact of a finger on the touch screen. In some embodiments, the device translates the rough finger-based input into a precise pointer/cursor position or command for performing the actions desired by the user.

[0053] In some embodiments, in addition to the touch screen, device 100 optionally includes a touchpad for activating or deactivating particular functions. In some embodiments, the touchpad is a touch-sensitive area of the device that, unlike the touch screen, does not display visual output. The touchpad is, optionally, a touch-sensitive surface that is separate from touch screen 112 or an extension of the touch-sensitive surface formed by the touch screen.

[0054] Device 100 also includes power system 162 for powering the various components. Power system 162 optionally includes a power management system, one or more power sources (e.g., battery, alternating current (AC)), a recharging system, a power failure detection circuit, a power converter or inverter, a power status indicator (e.g., a light-emitting diode (LED)) and any other components associated with the generation, management and distribution of power in portable devices.

[0055] Device 100 optionally also includes one or more optical sensors 164. FIG. 1A shows an optical sensor coupled to optical sensor controller 158 in I/O subsystem 106. Optical sensor 164 optionally includes charge-coupled device (CCD) or complementary metal-oxide semiconductor (CMOS) phototransistors. Optical sensor 164 receives light from the environment, projected through one or more lenses, and converts the light to data representing an image. In conjunction with imaging module 143 (also called a camera module), optical sensor 164 optionally captures still images or video. In some embodiments, an optical sensor is located on the back of device 100, opposite touch screen display 112 on the front of the device so that the touch screen display is enabled for use as a viewfinder for

still and/or video image acquisition. In some embodiments, an optical sensor is located on the front of the device so that the user's image is, optionally, obtained for video conferencing while the user views the other video conference participants on the touch screen display. In some embodiments, the position of optical sensor 164 can be changed by the user (e.g., by rotating the lens and the sensor in the device housing) so that a single optical sensor 164 is used along with the touch screen display for both video conferencing and still and/or video image acquisition.

[0056] Device 100 optionally also includes one or more depth camera sensors 175. FIG. 1A shows a depth camera sensor coupled to depth camera controller 169 in I/O subsystem 106. Depth camera sensor 175 receives data from the environment to create a three dimensional model of an object (e.g., a face) within a scene from a viewpoint (e.g., a depth camera sensor). In some embodiments, in conjunction with imaging module 143 (also called a camera module), depth camera sensor 175 is optionally used to determine a depth map of different portions of an image captured by the imaging module 143. In some embodiments, a depth camera sensor is located on the front of device 100 so that the user's image with depth information is, optionally, obtained for video conferencing while the user views the other video conference participants on the touch screen display and to capture selfies with depth map data. In some embodiments, the depth camera sensor 175 is located on the back of device, or on the back and the front of the device 100. In some embodiments, the position of depth camera sensor 175 can be changed by the user (e.g., by rotating the lens and the sensor in the device housing) so that a depth camera sensor 175 is used along with the touch screen display for both video conferencing and still and/or video image acquisition.

[0057] Device 100 optionally also includes one or more contact intensity sensors 165. FIG. 1A shows a contact intensity sensor coupled to intensity sensor controller 159 in I/O subsystem 106. Contact intensity sensor 165 optionally includes one or more piezoresistive strain gauges, capacitive force sensors, electric force sensors, piezoelectric force sensors, optical force sensors, capacitive touch-sensitive surfaces, or other intensity sensors (e.g., sensors used to measure the force (or pressure) of a contact on a touch-sensitive surface). Contact intensity sensor 165 receives contact intensity information (e.g., pressure information or a proxy for pressure information) from the environment. In some embodiments, at least one contact intensity sensor is collocated with, or proximate to, a touch-sensitive surface (e.g., touch-sensitive display system 112). In some embodiments, at least one contact

intensity sensor is located on the back of device 100, opposite touch screen display 112, which is located on the front of device 100.

[0058] Device 100 optionally also includes one or more proximity sensors 166. FIG. 1A shows proximity sensor 166 coupled to peripherals interface 118. Alternately, proximity sensor 166 is, optionally, coupled to input controller 160 in I/O subsystem 106. Proximity sensor 166 optionally performs as described in U.S. Patent Application Nos. 11/241,839, "Proximity Detector In Handheld Device"; 11/240,788, "Proximity Detector In Handheld Device"; 11/620,702, "Using Ambient Light Sensor To Augment Proximity Sensor Output"; 11/586,862, "Automated Response To And Sensing Of User Activity In Portable Devices"; and 11/638,251, "Methods And Systems For Automatic Configuration Of Peripherals," which are hereby incorporated by reference in their entirety. In some embodiments, the proximity sensor turns off and disables touch screen 112 when the multifunction device is placed near the user's ear (e.g., when the user is making a phone call).

[0059] Device 100 optionally also includes one or more tactile output generators 167. FIG. 1A shows a tactile output generator coupled to haptic feedback controller 161 in I/O subsystem 106. Tactile output generator 167 optionally includes one or more electroacoustic devices such as speakers or other audio components and/or electromechanical devices that convert energy into linear motion such as a motor, solenoid, electroactive polymer, piezoelectric actuator, electrostatic actuator, or other tactile output generating component (e.g., a component that converts electrical signals into tactile outputs on the device). Contact intensity sensor 165 receives tactile feedback generation instructions from haptic feedback module 133 and generates tactile outputs on device 100 that are capable of being sensed by a user of device 100. In some embodiments, at least one tactile output generator is collocated with, or proximate to, a touch-sensitive surface (e.g., touch-sensitive display system 112) and, optionally, generates a tactile output by moving the touch-sensitive surface vertically (e.g., in/out of a surface of device 100) or laterally (e.g., back and forth in the same plane as a surface of device 100). In some embodiments, at least one tactile output generator sensor is located on the back of device 100, opposite touch screen display 112, which is located on the front of device 100.

[0060] Device 100 optionally also includes one or more accelerometers 168. FIG. 1A shows accelerometer 168 coupled to peripherals interface 118. Alternately, accelerometer 168 is, optionally, coupled to an input controller 160 in I/O subsystem 106. Accelerometer

168 optionally performs as described in U.S. Patent Publication No. 20050190059, "Acceleration-based Theft Detection System for Portable Electronic Devices," and U.S. Patent Publication No. 20060017692, "Methods And Apparatuses For Operating A Portable Device Based On An Accelerometer," both of which are incorporated by reference herein in their entirety. In some embodiments, information is displayed on the touch screen display in a portrait view or a landscape view based on an analysis of data received from the one or more accelerometers. Device 100 optionally includes, in addition to accelerometer(s) 168, a magnetometer and a GPS (or GLONASS or other global navigation system) receiver for obtaining information concerning the location and orientation (e.g., portrait or landscape) of device 100.

[0061] In some embodiments, the software components stored in memory 102 include operating system 126, communication module (or set of instructions) 128, contact/motion module (or set of instructions) 130, graphics module (or set of instructions) 132, text input module (or set of instructions) 134, Global Positioning System (GPS) module (or set of instructions) 135, and applications (or sets of instructions) 136. Furthermore, in some embodiments, memory 102 (FIG. 1A) or 370 (FIG. 3) stores device/global internal state 157, as shown in FIGS. 1A and 3. Device/global internal state 157 includes one or more of: active application state, indicating which applications, if any, are currently active; display state, indicating what applications, views or other information occupy various regions of touch screen display 112; sensor state, including information obtained from the device's various sensors and input control devices 116; and location information concerning the device's location and/or attitude.

[0062] Operating system 126 (e.g., Darwin, RTXC, LINUX, UNIX, OS X, iOS, WINDOWS, or an embedded operating system such as VxWorks) includes various software components and/or drivers for controlling and managing general system tasks (e.g., memory management, storage device control, power management, etc.) and facilitates communication between various hardware and software components.

[0063] Communication module 128 facilitates communication with other devices over one or more external ports 124 and also includes various software components for handling data received by RF circuitry 108 and/or external port 124. External port 124 (e.g., Universal Serial Bus (USB), FIREWIRE, etc.) is adapted for coupling directly to other devices or indirectly over a network (e.g., the Internet, wireless LAN, etc.). In some embodiments, the

external port is a multi-pin (e.g., 30-pin) connector that is the same as, or similar to and/or compatible with, the 30-pin connector used on iPod® (trademark of Apple Inc.) devices.

[0064] Contact/motion module 130 optionally detects contact with touch screen 112 (in conjunction with display controller 156) and other touch-sensitive devices (e.g., a touchpad or physical click wheel). Contact/motion module 130 includes various software components for performing various operations related to detection of contact, such as determining if contact has occurred (e.g., detecting a finger-down event), determining an intensity of the contact (e.g., the force or pressure of the contact or a substitute for the force or pressure of the contact), determining if there is movement of the contact and tracking the movement across the touch-sensitive surface (e.g., detecting one or more finger-dragging events), and determining if the contact has ceased (e.g., detecting a finger-up event or a break in contact). Contact/motion module 130 receives contact data from the touch-sensitive surface. Determining movement of the point of contact, which is represented by a series of contact data, optionally includes determining speed (magnitude), velocity (magnitude and direction), and/or an acceleration (a change in magnitude and/or direction) of the point of contact. These operations are, optionally, applied to single contacts (e.g., one finger contacts) or to multiple simultaneous contacts (e.g., "multitouch"/multiple finger contacts). In some embodiments, contact/motion module 130 and display controller 156 detect contact on a touchpad.

[0065] In some embodiments, contact/motion module 130 uses a set of one or more intensity thresholds to determine whether an operation has been performed by a user (e.g., to determine whether a user has "clicked" on an icon). In some embodiments, at least a subset of the intensity thresholds are determined in accordance with software parameters (e.g., the intensity thresholds are not determined by the activation thresholds of particular physical actuators and can be adjusted without changing the physical hardware of device 100). For example, a mouse "click" threshold of a trackpad or touch screen display can be set to any of a large range of predefined threshold values without changing the trackpad or touch screen display hardware. Additionally, in some implementations, a user of the device is provided with software settings for adjusting one or more of the set of intensity thresholds (e.g., by adjusting individual intensity thresholds and/or by adjusting a plurality of intensity thresholds at once with a system-level click "intensity" parameter).

[0066] Contact/motion module 130 optionally detects a gesture input by a user. Different gestures on the touch-sensitive surface have different contact patterns (e.g., different motions,

timings, and/or intensities of detected contacts). Thus, a gesture is, optionally, detected by detecting a particular contact pattern. For example, detecting a finger tap gesture includes detecting a finger-down event followed by detecting a finger-up (liftoff) event at the same position (or substantially the same position) as the finger-down event (e.g., at the position of an icon). As another example, detecting a finger swipe gesture on the touch-sensitive surface includes detecting a finger-down event followed by detecting one or more finger-dragging events, and subsequently followed by detecting a finger-up (liftoff) event.

[0067] Graphics module 132 includes various known software components for rendering and displaying graphics on touch screen 112 or other display, including components for changing the visual impact (e.g., brightness, transparency, saturation, contrast, or other visual property) of graphics that are displayed. As used herein, the term "graphics" includes any object that can be displayed to a user, including, without limitation, text, web pages, icons (such as user-interface objects including soft keys), digital images, videos, animations, and the like.

[0068] In some embodiments, graphics module 132 stores data representing graphics to be used. Each graphic is, optionally, assigned a corresponding code. Graphics module 132 receives, from applications etc., one or more codes specifying graphics to be displayed along with, if necessary, coordinate data and other graphic property data, and then generates screen image data to output to display controller 156.

[0069] Haptic feedback module 133 includes various software components for generating instructions used by tactile output generator(s) 167 to produce tactile outputs at one or more locations on device 100 in response to user interactions with device 100.

[0070] Text input module 134, which is, optionally, a component of graphics module 132, provides soft keyboards for entering text in various applications (e.g., contacts 137, e-mail 140, IM 141, browser 147, and any other application that needs text input).

[0071] GPS module 135 determines the location of the device and provides this information for use in various applications (e.g., to telephone 138 for use in location-based dialing; to camera 143 as picture/video metadata; and to applications that provide location-based services such as weather widgets, local yellow page widgets, and map/navigation widgets).

[0072] Applications 136 optionally include the following modules (or sets of instructions), or a subset or superset thereof:

- Contacts module 137 (sometimes called an address book or contact list);
- Telephone module 138;
- Video conference module 139;
- E-mail client module 140;
- Instant messaging (IM) module 141;
- Workout support module 142;
- Camera module 143 for still and/or video images;
- Image management module 144;
- Video player module;
- Music player module;
- Browser module 147;
- Calendar module 148;
- Widget modules 149, which optionally include one or more of: weather widget 149-1, stocks widget 149-2, calculator widget 149-3, alarm clock widget 149-4, dictionary widget 149-5, and other widgets obtained by the user, as well as user-created widgets 149-6;
- Widget creator module 150 for making user-created widgets 149-6;
- Search module 151;
- Video and music player module 152, which merges video player module and music player module;
- Notes module 153;

- Map module 154; and/or
- Online video module 155.

[0073] Examples of other applications 136 that are, optionally, stored in memory 102 include other word processing applications, other image editing applications, drawing applications, presentation applications, JAVA-enabled applications, encryption, digital rights management, voice recognition, and voice replication.

[0074] In conjunction with touch screen 112, display controller 156, contact/motion module 130, graphics module 132, and text input module 134, contacts module 137 are, optionally, used to manage an address book or contact list (e.g., stored in application internal state 192 of contacts module 137 in memory 102 or memory 370), including: adding name(s) to the address book; deleting name(s) from the address book; associating telephone number(s), e-mail address(es), physical address(es) or other information with a name; associating an image with a name; categorizing and sorting names; providing telephone numbers or e-mail addresses to initiate and/or facilitate communications by telephone 138, video conference module 139, e-mail 140, or IM 141; and so forth.

[0075] In conjunction with RF circuitry 108, audio circuitry 110, speaker 111, microphone 113, touch screen 112, display controller 156, contact/motion module 130, graphics module 132, and text input module 134, telephone module 138 are optionally, used to enter a sequence of characters corresponding to a telephone number, access one or more telephone numbers in contacts module 137, modify a telephone number that has been entered, dial a respective telephone number, conduct a conversation, and disconnect or hang up when the conversation is completed. As noted above, the wireless communication optionally uses any of a plurality of communications standards, protocols, and technologies.

[0076] In conjunction with RF circuitry 108, audio circuitry 110, speaker 111, microphone 113, touch screen 112, display controller 156, optical sensor 164, optical sensor controller 158, contact/motion module 130, graphics module 132, text input module 134, contacts module 137, and telephone module 138, video conference module 139 includes executable instructions to initiate, conduct, and terminate a video conference between a user and one or more other participants in accordance with user instructions.

[0077] In conjunction with RF circuitry 108, touch screen 112, display controller 156, contact/motion module 130, graphics module 132, and text input module 134, e-mail client module 140 includes executable instructions to create, send, receive, and manage e-mail in response to user instructions. In conjunction with image management module 144, e-mail client module 140 makes it very easy to create and send e-mails with still or video images taken with camera module 143.

[0078] In conjunction with RF circuitry 108, touch screen 112, display controller 156, contact/motion module 130, graphics module 132, and text input module 134, the instant messaging module 141 includes executable instructions to enter a sequence of characters corresponding to an instant message, to modify previously entered characters, to transmit a respective instant message (for example, using a Short Message Service (SMS) or Multimedia Message Service (MMS) protocol for telephony-based instant messages or using XMPP, SIMPLE, or IMPS for Internet-based instant messages), to receive instant messages, and to view received instant messages. In some embodiments, transmitted and/or received instant messages optionally include graphics, photos, audio files, video files and/or other attachments as are supported in an MMS and/or an Enhanced Messaging Service (EMS). As used herein, "instant messaging" refers to both telephony-based messages (e.g., messages sent using SMS or MMS) and Internet-based messages (e.g., messages sent using XMPP, SIMPLE, or IMPS).

[0079] In conjunction with RF circuitry 108, touch screen 112, display controller 156, contact/motion module 130, graphics module 132, text input module 134, GPS module 135, map module 154, and music player module, workout support module 142 includes executable instructions to create workouts (e.g., with time, distance, and/or calorie burning goals); communicate with workout sensors (sports devices); receive workout sensor data; calibrate sensors used to monitor a workout; select and play music for a workout; and display, store, and transmit workout data.

[0080] In conjunction with touch screen 112, display controller 156, optical sensor(s) 164, optical sensor controller 158, contact/motion module 130, graphics module 132, and image management module 144, camera module 143 includes executable instructions to capture still images or video (including a video stream) and store them into memory 102, modify characteristics of a still image or video, or delete a still image or video from memory 102.

[0081] In conjunction with touch screen 112, display controller 156, contact/motion module 130, graphics module 132, text input module 134, and camera module 143, image management module 144 includes executable instructions to arrange, modify (e.g., edit), or otherwise manipulate, label, delete, present (e.g., in a digital slide show or album), and store still and/or video images.

[0082] In conjunction with RF circuitry 108, touch screen 112, display controller 156, contact/motion module 130, graphics module 132, and text input module 134, browser module 147 includes executable instructions to browse the Internet in accordance with user instructions, including searching, linking to, receiving, and displaying web pages or portions thereof, as well as attachments and other files linked to web pages.

[0083] In conjunction with RF circuitry 108, touch screen 112, display controller 156, contact/motion module 130, graphics module 132, text input module 134, e-mail client module 140, and browser module 147, calendar module 148 includes executable instructions to create, display, modify, and store calendars and data associated with calendars (e.g., calendar entries, to-do lists, etc.) in accordance with user instructions.

[0084] In conjunction with RF circuitry 108, touch screen 112, display controller 156, contact/motion module 130, graphics module 132, text input module 134, and browser module 147, widget modules 149 are mini-applications that are, optionally, downloaded and used by a user (e.g., weather widget 149-1, stocks widget 149-2, calculator widget 149-3, alarm clock widget 149-4, and dictionary widget 149-5) or created by the user (e.g., user-created widget 149-6). In some embodiments, a widget includes an HTML (Hypertext Markup Language) file, a CSS (Cascading Style Sheets) file, and a JavaScript file. In some embodiments, a widget includes an XML (Extensible Markup Language) file and a JavaScript file (e.g., Yahoo! Widgets).

[0085] In conjunction with RF circuitry 108, touch screen 112, display controller 156, contact/motion module 130, graphics module 132, text input module 134, and browser module 147, the widget creator module 150 are, optionally, used by a user to create widgets (e.g., turning a user-specified portion of a web page into a widget).

[0086] In conjunction with touch screen 112, display controller 156, contact/motion module 130, graphics module 132, and text input module 134, search module 151 includes executable instructions to search for text, music, sound, image, video, and/or other files in

memory 102 that match one or more search criteria (e.g., one or more user-specified search terms) in accordance with user instructions.

[0087] In conjunction with touch screen 112, display controller 156, contact/motion module 130, graphics module 132, audio circuitry 110, speaker 111, RF circuitry 108, and browser module 147, video and music player module 152 includes executable instructions that allow the user to download and play back recorded music and other sound files stored in one or more file formats, such as MP3 or AAC files, and executable instructions to display, present, or otherwise play back videos (e.g., on touch screen 112 or on an external, connected display via external port 124). In some embodiments, device 100 optionally includes the functionality of an MP3 player, such as an iPod (trademark of Apple Inc.).

[0088] In conjunction with touch screen 112, display controller 156, contact/motion module 130, graphics module 132, and text input module 134, notes module 153 includes executable instructions to create and manage notes, to-do lists, and the like in accordance with user instructions.

[0089] In conjunction with RF circuitry 108, touch screen 112, display controller 156, contact/motion module 130, graphics module 132, text input module 134, GPS module 135, and browser module 147, map module 154 are, optionally, used to receive, display, modify, and store maps and data associated with maps (e.g., driving directions, data on stores and other points of interest at or near a particular location, and other location-based data) in accordance with user instructions.

[0090] In conjunction with touch screen 112, display controller 156, contact/motion module 130, graphics module 132, audio circuitry 110, speaker 111, RF circuitry 108, text input module 134, e-mail client module 140, and browser module 147, online video module 155 includes instructions that allow the user to access, browse, receive (e.g., by streaming and/or download), play back (e.g., on the touch screen or on an external, connected display via external port 124), send an e-mail with a link to a particular online video, and otherwise manage online videos in one or more file formats, such as H.264. In some embodiments, instant messaging module 141, rather than e-mail client module 140, is used to send a link to a particular online video. Additional description of the online video application can be found in U.S. Provisional Patent Application No. 60/936,562, "Portable Multifunction Device, Method, and Graphical User Interface for Playing Online Videos," filed June 20, 2007, and

U.S. Patent Application No. 11/968,067, "Portable Multifunction Device, Method, and Graphical User Interface for Playing Online Videos," filed December 31, 2007, the contents of which are hereby incorporated by reference in their entirety.

[0091] Each of the above-identified modules and applications corresponds to a set of executable instructions for performing one or more functions described above and the methods described in this application (e.g., the computer-implemented methods and other information processing methods described herein). These modules (e.g., sets of instructions) need not be implemented as separate software programs (such as computer programs (e.g., including instructions)), procedures, or modules, and thus various subsets of these modules are, optionally, combined or otherwise rearranged in various embodiments. For example, video player module is, optionally, combined with music player module into a single module (e.g., video and music player module 152, FIG. 1A). In some embodiments, memory 102 optionally stores a subset of the modules and data structures identified above. Furthermore, memory 102 optionally stores additional modules and data structures not described above.

[0092] In some embodiments, device 100 is a device where operation of a predefined set of functions on the device is performed exclusively through a touch screen and/or a touchpad. By using a touch screen and/or a touchpad as the primary input control device for operation of device 100, the number of physical input control devices (such as push buttons, dials, and the like) on device 100 is, optionally, reduced.

[0093] The predefined set of functions that are performed exclusively through a touch screen and/or a touchpad optionally include navigation between user interfaces. In some embodiments, the touchpad, when touched by the user, navigates device 100 to a main, home, or root menu from any user interface that is displayed on device 100. In such embodiments, a "menu button" is implemented using a touchpad. In some other embodiments, the menu button is a physical push button or other physical input control device instead of a touchpad.

[0094] FIG. 1B is a block diagram illustrating exemplary components for event handling in accordance with some embodiments. In some embodiments, memory 102 (FIG. 1A) or 370 (FIG. 3) includes event sorter 170 (e.g., in operating system 126) and a respective application 136-1 (e.g., any of the aforementioned applications 137-151, 155, 380-390).

[0095] Event sorter 170 receives event information and determines the application 136-1 and application view 191 of application 136-1 to which to deliver the event information.

Event sorter 170 includes event monitor 171 and event dispatcher module 174. In some embodiments, application 136-1 includes application internal state 192, which indicates the current application view(s) displayed on touch-sensitive display 112 when the application is active or executing. In some embodiments, device/global internal state 157 is used by event sorter 170 to determine which application(s) is (are) currently active, and application internal state 192 is used by event sorter 170 to determine application views 191 to which to deliver event information.

[0096] In some embodiments, application internal state 192 includes additional information, such as one or more of: resume information to be used when application 136-1 resumes execution, user interface state information that indicates information being displayed or that is ready for display by application 136-1, a state queue for enabling the user to go back to a prior state or view of application 136-1, and a redo/undo queue of previous actions taken by the user.

[0097] Event monitor 171 receives event information from peripherals interface 118. Event information includes information about a sub-event (e.g., a user touch on touch-sensitive display 112, as part of a multi-touch gesture). Peripherals interface 118 transmits information it receives from I/O subsystem 106 or a sensor, such as proximity sensor 166, accelerometer(s) 168, and/or microphone 113 (through audio circuitry 110). Information that peripherals interface 118 receives from I/O subsystem 106 includes information from touch-sensitive display 112 or a touch-sensitive surface.

[0098] In some embodiments, event monitor 171 sends requests to the peripherals interface 118 at predetermined intervals. In response, peripherals interface 118 transmits event information. In other embodiments, peripherals interface 118 transmits event information only when there is a significant event (e.g., receiving an input above a predetermined noise threshold and/or for more than a predetermined duration).

[0099] In some embodiments, event sorter 170 also includes a hit view determination module 172 and/or an active event recognizer determination module 173.

[0100] Hit view determination module 172 provides software procedures for determining where a sub-event has taken place within one or more views when touch-sensitive display 112 displays more than one view. Views are made up of controls and other elements that a user can see on the display.

[0101] Another aspect of the user interface associated with an application is a set of views, sometimes herein called application views or user interface windows, in which information is displayed and touch-based gestures occur. The application views (of a respective application) in which a touch is detected optionally correspond to programmatic levels within a programmatic or view hierarchy of the application. For example, the lowest level view in which a touch is detected is, optionally, called the hit view, and the set of events that are recognized as proper inputs are, optionally, determined based, at least in part, on the hit view of the initial touch that begins a touch-based gesture.

[0102] Hit view determination module 172 receives information related to sub-events of a touch-based gesture. When an application has multiple views organized in a hierarchy, hit view determination module 172 identifies a hit view as the lowest view in the hierarchy which should handle the sub-event. In most circumstances, the hit view is the lowest level view in which an initiating sub-event occurs (e.g., the first sub-event in the sequence of sub-events that form an event or potential event). Once the hit view is identified by the hit view determination module 172, the hit view typically receives all sub-events related to the same touch or input source for which it was identified as the hit view.

[0103] Active event recognizer determination module 173 determines which view or views within a view hierarchy should receive a particular sequence of sub-events. In some embodiments, active event recognizer determination module 173 determines that only the hit view should receive a particular sequence of sub-events. In other embodiments, active event recognizer determination module 173 determines that all views that include the physical location of a sub-event are actively involved views, and therefore determines that all actively involved views should receive a particular sequence of sub-events. In other embodiments, even if touch sub-events were entirely confined to the area associated with one particular view, views higher in the hierarchy would still remain as actively involved views.

[0104] Event dispatcher module 174 dispatches the event information to an event recognizer (e.g., event recognizer 180). In embodiments including active event recognizer determination module 173, event dispatcher module 174 delivers the event information to an event recognizer determined by active event recognizer determination module 173. In some embodiments, event dispatcher module 174 stores in an event queue the event information, which is retrieved by a respective event receiver 182.

[0105] In some embodiments, operating system 126 includes event sorter 170. Alternatively, application 136-1 includes event sorter 170. In yet other embodiments, event sorter 170 is a stand-alone module, or a part of another module stored in memory 102, such as contact/motion module 130.

[0106] In some embodiments, application 136-1 includes a plurality of event handlers 190 and one or more application views 191, each of which includes instructions for handling touch events that occur within a respective view of the application's user interface. Each application view 191 of the application 136-1 includes one or more event recognizers 180. Typically, a respective application view 191 includes a plurality of event recognizers 180. In other embodiments, one or more of event recognizers 180 are part of a separate module, such as a user interface kit or a higher level object from which application 136-1 inherits methods and other properties. In some embodiments, a respective event handler 190 includes one or more of: data updater 176, object updater 177, GUI updater 178, and/or event data 179 received from event sorter 170. Event handler 190 optionally utilizes or calls data updater 176, object updater 177, or GUI updater 178 to update the application internal state 192. Alternatively, one or more of the application views 191 include one or more respective event handlers 190. Also, in some embodiments, one or more of data updater 176, object updater 177, and GUI updater 178 are included in a respective application view 191.

[0107] A respective event recognizer 180 receives event information (e.g., event data 179) from event sorter 170 and identifies an event from the event information. Event recognizer 180 includes event receiver 182 and event comparator 184. In some embodiments, event recognizer 180 also includes at least a subset of: metadata 183, and event delivery instructions 188 (which optionally include sub-event delivery instructions).

[0108] Event receiver 182 receives event information from event sorter 170. The event information includes information about a sub-event, for example, a touch or a touch movement. Depending on the sub-event, the event information also includes additional information, such as location of the sub-event. When the sub-event concerns motion of a touch, the event information optionally also includes speed and direction of the sub-event. In some embodiments, events include rotation of the device from one orientation to another (e.g., from a portrait orientation to a landscape orientation, or vice versa), and the event information includes corresponding information about the current orientation (also called device attitude) of the device.

[0109] Event comparator 184 compares the event information to predefined event or sub-event definitions and, based on the comparison, determines an event or sub-event, or determines or updates the state of an event or sub-event. In some embodiments, event comparator 184 includes event definitions 186. Event definitions 186 contain definitions of events (e.g., predefined sequences of sub-events), for example, event 1 (187-1), event 2 (187-2), and others. In some embodiments, sub-events in an event (187) include, for example, touch begin, touch end, touch movement, touch cancellation, and multiple touching. In one example, the definition for event 1 (187-1) is a double tap on a displayed object. The double tap, for example, comprises a first touch (touch begin) on the displayed object for a predetermined phase, a first liftoff (touch end) for a predetermined phase, a second touch (touch begin) on the displayed object for a predetermined phase, and a second liftoff (touch end) for a predetermined phase. In another example, the definition for event 2 (187-2) is a dragging on a displayed object. The dragging, for example, comprises a touch (or contact) on the displayed object for a predetermined phase, a movement of the touch across touch-sensitive display 112, and liftoff of the touch (touch end). In some embodiments, the event also includes information for one or more associated event handlers 190.

[0110] In some embodiments, event definition 187 includes a definition of an event for a respective user-interface object. In some embodiments, event comparator 184 performs a hit test to determine which user-interface object is associated with a sub-event. For example, in an application view in which three user-interface objects are displayed on touch-sensitive display 112, when a touch is detected on touch-sensitive display 112, event comparator 184 performs a hit test to determine which of the three user-interface objects is associated with the touch (sub-event). If each displayed object is associated with a respective event handler 190, the event comparator uses the result of the hit test to determine which event handler 190 should be activated. For example, event comparator 184 selects an event handler associated with the sub-event and the object triggering the hit test.

[0111] In some embodiments, the definition for a respective event (187) also includes delayed actions that delay delivery of the event information until after it has been determined whether the sequence of sub-events does or does not correspond to the event recognizer's event type.

[0112] When a respective event recognizer 180 determines that the series of sub-events do not match any of the events in event definitions 186, the respective event recognizer 180

enters an event impossible, event failed, or event ended state, after which it disregards subsequent sub-events of the touch-based gesture. In this situation, other event recognizers, if any, that remain active for the hit view continue to track and process sub-events of an ongoing touch-based gesture.

[0113] In some embodiments, a respective event recognizer 180 includes metadata 183 with configurable properties, flags, and/or lists that indicate how the event delivery system should perform sub-event delivery to actively involved event recognizers. In some embodiments, metadata 183 includes configurable properties, flags, and/or lists that indicate how event recognizers interact, or are enabled to interact, with one another. In some embodiments, metadata 183 includes configurable properties, flags, and/or lists that indicate whether sub-events are delivered to varying levels in the view or programmatic hierarchy.

[0114] In some embodiments, a respective event recognizer 180 activates event handler 190 associated with an event when one or more particular sub-events of an event are recognized. In some embodiments, a respective event recognizer 180 delivers event information associated with the event to event handler 190. Activating an event handler 190 is distinct from sending (and deferred sending) sub-events to a respective hit view. In some embodiments, event recognizer 180 throws a flag associated with the recognized event, and event handler 190 associated with the flag catches the flag and performs a predefined process.

[0115] In some embodiments, event delivery instructions 188 include sub-event delivery instructions that deliver event information about a sub-event without activating an event handler. Instead, the sub-event delivery instructions deliver event information to event handlers associated with the series of sub-events or to actively involved views. Event handlers associated with the series of sub-events or with actively involved views receive the event information and perform a predetermined process.

[0116] In some embodiments, data updater 176 creates and updates data used in application 136-1. For example, data updater 176 updates the telephone number used in contacts module 137, or stores a video file used in video player module. In some embodiments, object updater 177 creates and updates objects used in application 136-1. For example, object updater 177 creates a new user-interface object or updates the position of a user-interface object. GUI updater 178 updates the GUI. For example, GUI updater 178

prepares display information and sends it to graphics module 132 for display on a touch-sensitive display.

[0117] In some embodiments, event handler(s) 190 includes or has access to data updater 176, object updater 177, and GUI updater 178. In some embodiments, data updater 176, object updater 177, and GUI updater 178 are included in a single module of a respective application 136-1 or application view 191. In other embodiments, they are included in two or more software modules.

[0118] It shall be understood that the foregoing discussion regarding event handling of user touches on touch-sensitive displays also applies to other forms of user inputs to operate multifunction devices 100 with input devices, not all of which are initiated on touch screens. For example, mouse movement and mouse button presses, optionally coordinated with single or multiple keyboard presses or holds; contact movements such as taps, drags, scrolls, etc. on touchpads; pen stylus inputs; movement of the device; oral instructions; detected eye movements; biometric inputs; and/or any combination thereof are optionally utilized as inputs corresponding to sub-events which define an event to be recognized.

[0119] FIG. 2 illustrates a portable multifunction device 100 having a touch screen 112 in accordance with some embodiments. The touch screen optionally displays one or more graphics within user interface (UI) 200. In this embodiment, as well as others described below, a user is enabled to select one or more of the graphics by making a gesture on the graphics, for example, with one or more fingers 202 (not drawn to scale in the figure) or one or more styluses 203 (not drawn to scale in the figure). In some embodiments, selection of one or more graphics occurs when the user breaks contact with the one or more graphics. In some embodiments, the gesture optionally includes one or more taps, one or more swipes (from left to right, right to left, upward and/or downward), and/or a rolling of a finger (from right to left, left to right, upward and/or downward) that has made contact with device 100. In some implementations or circumstances, inadvertent contact with a graphic does not select the graphic. For example, a swipe gesture that sweeps over an application icon optionally does not select the corresponding application when the gesture corresponding to selection is a tap.

[0120] Device 100 optionally also include one or more physical buttons, such as “home” or menu button 204. As described previously, menu button 204 is, optionally, used to

navigate to any application 136 in a set of applications that are, optionally, executed on device 100. Alternatively, in some embodiments, the menu button is implemented as a soft key in a GUI displayed on touch screen 112.

[0121] In some embodiments, device 100 includes touch screen 112, menu button 204, push button 206 for powering the device on/off and locking the device, volume adjustment button(s) 208, subscriber identity module (SIM) card slot 210, headset jack 212, and docking/charging external port 124. Push button 206 is, optionally, used to turn the power on/off on the device by depressing the button and holding the button in the depressed state for a predefined time interval; to lock the device by depressing the button and releasing the button before the predefined time interval has elapsed; and/or to unlock the device or initiate an unlock process. In an alternative embodiment, device 100 also accepts verbal input for activation or deactivation of some functions through microphone 113. Device 100 also, optionally, includes one or more contact intensity sensors 165 for detecting intensity of contacts on touch screen 112 and/or one or more tactile output generators 167 for generating tactile outputs for a user of device 100.

[0122] FIG. 3 is a block diagram of an exemplary multifunction device with a display and a touch-sensitive surface in accordance with some embodiments. Device 300 need not be portable. In some embodiments, device 300 is a laptop computer, a desktop computer, a tablet computer, a multimedia player device, a navigation device, an educational device (such as a child's learning toy), a gaming system, or a control device (e.g., a home or industrial controller). Device 300 typically includes one or more processing units (CPUs) 310, one or more network or other communications interfaces 360, memory 370, and one or more communication buses 320 for interconnecting these components. Communication buses 320 optionally include circuitry (sometimes called a chipset) that interconnects and controls communications between system components. Device 300 includes input/output (I/O) interface 330 comprising display 340, which is typically a touch screen display. I/O interface 330 also optionally includes a keyboard and/or mouse (or other pointing device) 350 and touchpad 355, tactile output generator 357 for generating tactile outputs on device 300 (e.g., similar to tactile output generator(s) 167 described above with reference to FIG. 1A), sensors 359 (e.g., optical, acceleration, proximity, touch-sensitive, and/or contact intensity sensors similar to contact intensity sensor(s) 165 described above with reference to FIG. 1A). Memory 370 includes high-speed random access memory, such as DRAM, SRAM, DDR

RAM, or other random access solid state memory devices; and optionally includes non-volatile memory, such as one or more magnetic disk storage devices, optical disk storage devices, flash memory devices, or other non-volatile solid state storage devices. Memory 370 optionally includes one or more storage devices remotely located from CPU(s) 310. In some embodiments, memory 370 stores programs, modules, and data structures analogous to the programs, modules, and data structures stored in memory 102 of portable multifunction device 100 (FIG. 1A), or a subset thereof. Furthermore, memory 370 optionally stores additional programs, modules, and data structures not present in memory 102 of portable multifunction device 100. For example, memory 370 of device 300 optionally stores drawing module 380, presentation module 382, word processing module 384, website creation module 386, disk authoring module 388, and/or spreadsheet module 390, while memory 102 of portable multifunction device 100 (FIG. 1A) optionally does not store these modules.

[0123] Each of the above-identified elements in FIG. 3 is, optionally, stored in one or more of the previously mentioned memory devices. Each of the above-identified modules corresponds to a set of instructions for performing a function described above. The above-identified modules or computer programs (e.g., sets of instructions or including instructions) need not be implemented as separate software programs (such as computer programs (e.g., including instructions)), procedures, or modules, and thus various subsets of these modules are, optionally, combined or otherwise rearranged in various embodiments. In some embodiments, memory 370 optionally stores a subset of the modules and data structures identified above. Furthermore, memory 370 optionally stores additional modules and data structures not described above.

[0124] Attention is now directed towards embodiments of user interfaces that are, optionally, implemented on, for example, portable multifunction device 100.

[0125] FIG. 4A illustrates an exemplary user interface for a menu of applications on portable multifunction device 100 in accordance with some embodiments. Similar user interfaces are, optionally, implemented on device 300. In some embodiments, user interface 400 includes the following elements, or a subset or superset thereof:

- Signal strength indicator(s) 402 for wireless communication(s), such as cellular and Wi-Fi signals;
- Time 404;

- Bluetooth indicator 405;
- Battery status indicator 406;
- Tray 408 with icons for frequently used applications, such as:
    - Icon 416 for telephone module 138, labeled "Phone," which optionally includes an indicator 414 of the number of missed calls or voicemail messages;
    - Icon 418 for e-mail client module 140, labeled "Mail," which optionally includes an indicator 410 of the number of unread e-mails;
    - Icon 420 for browser module 147, labeled "Browser;" and
    - Icon 422 for video and music player module 152, also referred to as iPod (trademark of Apple Inc.) module 152, labeled "iPod;" and
- Icons for other applications, such as:
    - Icon 424 for IM module 141, labeled "Messages;"
    - Icon 426 for calendar module 148, labeled "Calendar;"
    - Icon 428 for image management module 144, labeled "Photos;"
    - Icon 430 for camera module 143, labeled "Camera;"
    - Icon 432 for online video module 155, labeled "Online Video;"
    - Icon 434 for stocks widget 149-2, labeled "Stocks;"
    - Icon 436 for map module 154, labeled "Maps;"
    - Icon 438 for weather widget 149-1, labeled "Weather;"
    - Icon 440 for alarm clock widget 149-4, labeled "Clock;"
    - Icon 442 for workout support module 142, labeled "Workout Support;"
    - Icon 444 for notes module 153, labeled "Notes;" and
    - Icon 446 for a settings application or module, labeled "Settings," which provides access to settings for device 100 and its various applications 136.

[0126] It should be noted that the icon labels illustrated in FIG. 4A are merely exemplary. For example, icon 422 for video and music player module 152 is labeled "Music" or "Music Player." Other labels are, optionally, used for various application icons. In some embodiments, a label for a respective application icon includes a name of an application corresponding to the respective application icon. In some embodiments, a label for a particular application icon is distinct from a name of an application corresponding to the particular application icon.

[0127] FIG. 4B illustrates an exemplary user interface on a device (e.g., device 300, FIG. 3) with a touch-sensitive surface 451 (e.g., a tablet or touchpad 355, FIG. 3) that is separate from the display 450 (e.g., touch screen display 112). Device 300 also, optionally, includes one or more contact intensity sensors (e.g., one or more of sensors 359) for detecting intensity of contacts on touch-sensitive surface 451 and/or one or more tactile output generators 357 for generating tactile outputs for a user of device 300.

[0128] Although some of the examples that follow will be given with reference to inputs on touch screen display 112 (where the touch-sensitive surface and the display are combined), in some embodiments, the device detects inputs on a touch-sensitive surface that is separate from the display, as shown in FIG. 4B. In some embodiments, the touch-sensitive surface (e.g., 451 in FIG. 4B) has a primary axis (e.g., 452 in FIG. 4B) that corresponds to a primary axis (e.g., 453 in FIG. 4B) on the display (e.g., 450). In accordance with these embodiments, the device detects contacts (e.g., 460 and 462 in FIG. 4B) with the touch-sensitive surface 451 at locations that correspond to respective locations on the display (e.g., in FIG. 4B, 460 corresponds to 468 and 462 corresponds to 470). In this way, user inputs (e.g., contacts 460 and 462, and movements thereof) detected by the device on the touch-sensitive surface (e.g., 451 in FIG. 4B) are used by the device to manipulate the user interface on the display (e.g., 450 in FIG. 4B) of the multifunction device when the touch-sensitive surface is separate from the display. It should be understood that similar methods are, optionally, used for other user interfaces described herein.

[0129] Additionally, while the following examples are given primarily with reference to finger inputs (e.g., finger contacts, finger tap gestures, finger swipe gestures), it should be understood that, in some embodiments, one or more of the finger inputs are replaced with input from another input device (e.g., a mouse-based input or stylus input). For example, a swipe gesture is, optionally, replaced with a mouse click (e.g., instead of a contact) followed

by movement of the cursor along the path of the swipe (e.g., instead of movement of the contact). As another example, a tap gesture is, optionally, replaced with a mouse click while the cursor is located over the location of the tap gesture (e.g., instead of detection of the contact followed by ceasing to detect the contact). Similarly, when multiple user inputs are simultaneously detected, it should be understood that multiple computer mice are, optionally, used simultaneously, or a mouse and finger contacts are, optionally, used simultaneously.

[0130] FIG. 5A illustrates exemplary personal electronic device 500. Device 500 includes body 502. In some embodiments, device 500 can include some or all of the features described with respect to devices 100 and 300 (e.g., FIGS. 1A-4B). In some embodiments, device 500 has touch-sensitive display screen 504, hereafter touch screen 504. Alternatively, or in addition to touch screen 504, device 500 has a display and a touch-sensitive surface. As with devices 100 and 300, in some embodiments, touch screen 504 (or the touch-sensitive surface) optionally includes one or more intensity sensors for detecting intensity of contacts (e.g., touches) being applied. The one or more intensity sensors of touch screen 504 (or the touch-sensitive surface) can provide output data that represents the intensity of touches. The user interface of device 500 can respond to touches based on their intensity, meaning that touches of different intensities can invoke different user interface operations on device 500.

[0131] Exemplary techniques for detecting and processing touch intensity are found, for example, in related applications: International Patent Application Serial No. PCT/US2013/040061, titled "Device, Method, and Graphical User Interface for Displaying User Interface Objects Corresponding to an Application," filed May 8, 2013, published as WIPO Publication No. WO/2013/169849, and International Patent Application Serial No. PCT/US2013/069483, titled "Device, Method, and Graphical User Interface for Transitioning Between Touch Input to Display Output Relationships," filed November 11, 2013, published as WIPO Publication No. WO/2014/105276, each of which is hereby incorporated by reference in their entirety.

[0132] In some embodiments, device 500 has one or more input mechanisms 506 and 508. Input mechanisms 506 and 508, if included, can be physical. Examples of physical input mechanisms include push buttons and rotatable mechanisms. In some embodiments, device 500 has one or more attachment mechanisms. Such attachment mechanisms, if included, can permit attachment of device 500 with, for example, hats, eyewear, earrings, necklaces, shirts, jackets, bracelets, watch straps, chains, trousers, belts, shoes, purses,

backpacks, and so forth. These attachment mechanisms permit device 500 to be worn by a user.

[0133] FIG. 5B depicts exemplary personal electronic device 500. In some embodiments, device 500 can include some or all of the components described with respect to FIGS. 1A, 1B, and 3. Device 500 has bus 512 that operatively couples I/O section 514 with one or more computer processors 516 and memory 518. I/O section 514 can be connected to display 504, which can have touch-sensitive component 522 and, optionally, intensity sensor 524 (e.g., contact intensity sensor). In addition, I/O section 514 can be connected with communication unit 530 for receiving application and operating system data, using Wi-Fi, Bluetooth, near field communication (NFC), cellular, and/or other wireless communication techniques. Device 500 can include input mechanisms 506 and/or 508. Input mechanism 506 is, optionally, a rotatable input device or a depressible and rotatable input device, for example. Input mechanism 508 is, optionally, a button, in some examples.

[0134] Input mechanism 508 is, optionally, a microphone, in some examples. Personal electronic device 500 optionally includes various sensors, such as GPS sensor 532, accelerometer 534, directional sensor 540 (e.g., compass), gyroscope 536, motion sensor 538, and/or a combination thereof, all of which can be operatively connected to I/O section 514.

[0135] Memory 518 of personal electronic device 500 can include one or more non-transitory computer-readable storage mediums, for storing computer-executable instructions, which, when executed by one or more computer processors 516, for example, can cause the computer processors to perform the techniques described below, including processes 700 (FIG. 7). A computer-readable storage medium can be any medium that can tangibly contain or store computer-executable instructions for use by or in connection with the instruction execution system, apparatus, or device. In some examples, the storage medium is a transitory computer-readable storage medium. In some examples, the storage medium is a non-transitory computer-readable storage medium. The non-transitory computer-readable storage medium can include, but is not limited to, magnetic, optical, and/or semiconductor storages. Examples of such storage include magnetic disks, optical discs based on CD, DVD, or Blu-ray technologies, as well as persistent solid-state memory such as flash, solid-state drives, and the like. Personal electronic device 500 is not limited to the components and configuration of FIG. 5B, but can include other or additional components in multiple configurations.

[0136] As used here, the term "affordance" refers to a user-interactive graphical user interface object that is, optionally, displayed on the display screen of devices 100, 300, and/or 500 (FIGS. 1A, 3, and 5A-5B). For example, an image (e.g., icon), a button, and text (e.g., hyperlink) each optionally constitute an affordance.

[0137] As used herein, the term "focus selector" refers to an input element that indicates a current part of a user interface with which a user is interacting. In some implementations that include a cursor or other location marker, the cursor acts as a "focus selector" so that when an input (e.g., a press input) is detected on a touch-sensitive surface (e.g., touchpad 355 in FIG. 3 or touch-sensitive surface 451 in FIG. 4B) while the cursor is over a particular user interface element (e.g., a button, window, slider, or other user interface element), the particular user interface element is adjusted in accordance with the detected input. In some implementations that include a touch screen display (e.g., touch-sensitive display system 112 in FIG. 1A or touch screen 112 in FIG. 4A) that enables direct interaction with user interface elements on the touch screen display, a detected contact on the touch screen acts as a "focus selector" so that when an input (e.g., a press input by the contact) is detected on the touch screen display at a location of a particular user interface element (e.g., a button, window, slider, or other user interface element), the particular user interface element is adjusted in accordance with the detected input. In some implementations, focus is moved from one region of a user interface to another region of the user interface without corresponding movement of a cursor or movement of a contact on a touch screen display (e.g., by using a tab key or arrow keys to move focus from one button to another button); in these implementations, the focus selector moves in accordance with movement of focus between different regions of the user interface. Without regard to the specific form taken by the focus selector, the focus selector is generally the user interface element (or contact on a touch screen display) that is controlled by the user so as to communicate the user's intended interaction with the user interface (e.g., by indicating, to the device, the element of the user interface with which the user is intending to interact). For example, the location of a focus selector (e.g., a cursor, a contact, or a selection box) over a respective button while a press input is detected on the touch-sensitive surface (e.g., a touchpad or touch screen) will indicate that the user is intending to activate the respective button (as opposed to other user interface elements shown on a display of the device).

[0138] As used in the specification and claims, the term "characteristic intensity" of a contact refers to a characteristic of the contact based on one or more intensities of the contact. In some embodiments, the characteristic intensity is based on multiple intensity samples. The characteristic intensity is, optionally, based on a predefined number of intensity samples, or a set of intensity samples collected during a predetermined time period (e.g., 0.05, 0.1, 0.2, 0.5, 1, 2, 5, 10 seconds) relative to a predefined event (e.g., after detecting the contact, prior to detecting liftoff of the contact, before or after detecting a start of movement of the contact, prior to detecting an end of the contact, before or after detecting an increase in intensity of the contact, and/or before or after detecting a decrease in intensity of the contact). A characteristic intensity of a contact is, optionally, based on one or more of: a maximum value of the intensities of the contact, a mean value of the intensities of the contact, an average value of the intensities of the contact, a top 10 percentile value of the intensities of the contact, a value at the half maximum of the intensities of the contact, a value at the 90 percent maximum of the intensities of the contact, or the like. In some embodiments, the duration of the contact is used in determining the characteristic intensity (e.g., when the characteristic intensity is an average of the intensity of the contact over time). In some embodiments, the characteristic intensity is compared to a set of one or more intensity thresholds to determine whether an operation has been performed by a user. For example, the set of one or more intensity thresholds optionally includes a first intensity threshold and a second intensity threshold. In this example, a contact with a characteristic intensity that does not exceed the first threshold results in a first operation, a contact with a characteristic intensity that exceeds the first intensity threshold and does not exceed the second intensity threshold results in a second operation, and a contact with a characteristic intensity that exceeds the second threshold results in a third operation. In some embodiments, a comparison between the characteristic intensity and one or more thresholds is used to determine whether or not to perform one or more operations (e.g., whether to perform a respective operation or forgo performing the respective operation), rather than being used to determine whether to perform a first operation or a second operation.

[0139] Attention is now directed towards embodiments of user interfaces ("UI") and associated processes that are implemented on an electronic device, such as portable multifunction device 100, device 300, or device 500.

[0140] FIGS. 6A-6R illustrate exemplary user interfaces for managing memory, in accordance with some embodiments. The user interfaces in these figures are used to illustrate the processes described below, including the processes in FIG. 7.

[0141] FIG. 6A illustrates computer system 600 displaying user interface 610 of a camera application on display 602 of computer system 600. Computer system 600 optionally includes some or all the features of devices 100, 300, and/or 500. The camera application is in a video recording mode, as indicated by mode selector 610G, but is not currently recording. In some embodiments, user interface 610 is displayed as a result of starting the camera application or switching from another application to displaying the user interface of the camera application in video recording mode. In some embodiments, user interface 610 is displayed as a result of changing the mode of the camera application, such as by using mode selector 610G, to the video recording mode from another mode (e.g., from a photo capture mode and/or from a portrait capture mode). In some embodiments, the photo capture mode is used to capture a still image and/or a fixed-duration video (e.g., a video with a predefined duration).

[0142] At FIG. 6A, camera viewfinder 610A is showing a field-of-view of one or more cameras of computer system 600, particularly a skateboarding scene. At FIG. 6A, the flash is disabled, as indicated by flash indicator 610B, high quality recording is disabled, as indicated by quality indicator 610C, recording is not in progress, as indicator by recording timer 610D, HD resolution and 30 frames-per-second are selected, as indicated by resolution indicator 610E. Zoom option 610F enables (e.g., via touch inputs and/or air gestures) zooming in and out camera viewfinder 610A, shutter button 610H enables (e.g., via touch inputs and/or air gestures) starting and stopping video recordings, and camera selector 610I enables (e.g., via touch inputs and/or air gestures) changing the camera(s) (e.g., among front camera and/or back camera) used to display the content of viewfinder 610A.

[0143] Videos recorded while high quality recording is enabled take more storage space as compared to videos recorded while high quality recording is disabled. For example, a 30 second HD resolution, 30FPS recording using high quality recording may take 50%, 75%, or 200% more storage space than the same 30 second HD resolution, 30FPS recording that does not use the high quality recording feature. For another example, a 30 second 4K resolution, 30FPS recording using high quality recording may take 50%, 75%, or 200% more storage space than the same 30 second 4K resolution, 30FPS recording that does not use the high

quality recording feature. For another example, a 30 second 4K resolution, 60FPS recording using high quality recording may take 50%, 75%, or 200% more storage space than the same 30 second 4K resolution, 60FPS recording that does not use the high quality recording feature. However, videos recorded using the high quality recording feature have higher quality (e.g., are near-lossless, have a reduced degree of compression, and/or have higher bitrates) and are therefore advantageous. In some embodiments, when the high quality recording feature is enabled, the computer system uses a lossless or near-lossless codec for video recording. In some embodiments, when the high quality recording feature is not enabled, the computer system does not use the lossless or near-lossless codec for video recording. In some embodiments, when the high quality recording feature is enabled, the computer system encodes and stores video using a high bitrate and/or high quality video codec such as Apple ProRes (e.g., ProRes 422 or ProRes 4444) or CineForm. Additional information regarding ProRes is available at support.apple.com/en-us/HT202410. In some embodiments, when the high quality recording feature is not enabled, the computer system encodes and stores video using a lower bitrate (e.g., a highly compressed and or highly lossy) video codec such as H.264 or H.265/HEVC.

[0144] At FIG. 6A, max recording time indicator 620A and resource management option 620B are not displayed because the high quality recording feature is not enabled. In some embodiments, max recording time indicator 620A is not displayed when the high quality recording feature is not enabled because running out of memory is rarely an issue when the feature is not in use. At FIG. 6A, computer system 600 does not display max recording time indicator 620A and resource management option 620B (see, e.g., FIG. 6E) even when other options (e.g., resolution, frame rate, and/or flash) because the high quality recording feature is not enabled. At FIG. 6A, computer system 600 detects tap input 650A on quality indicator 610C.

[0145] At FIG. 6B, in response to detecting tap input 650A on quality indicator 610C, computer system 600 enables the high quality recording feature and updates quality indicator 610C to indicate that the high quality recording feature is enabled (and, accordingly, that videos will be recorded using the high quality feature). In response to detecting tap input 650A, computer system 600 also displays max recording time indicator 620A, which indicates a maximum amount of time (e.g., in minutes and/or in seconds) of video that can be recorded with the current video recording settings (e.g., high quality recording, HD

resolution, and 30 FPS). In some embodiments, the maximum amount of time of video that can be recorded is based on available (e.g., unused) local memory at the computer system. In some embodiments, the maximum amount of minutes of video that can be recorded is based on available memory at an external computer system (e.g., at a server connected via a wireless network connection). In some embodiments, max recording time indicator 620A is overlaid on viewfinder 610A (and, in some embodiments, content of viewfinder 610A is visible through portions of the indicator). In some embodiments, computer system 600 displays max recording time indicator 620A when not recording while the high quality recording feature is enabled, regardless of the amount of time of video that can be recorded (e.g., based on available memory). At FIG. 6B, computer system 600 does not display resource management option 620B as part of user interface 610 because the amount of time of video that can be recorded (e.g., 60 minutes, as indicated by max recording time indicator 620A) exceeds a threshold recording duration (e.g., 10 minutes, 15 minutes, or 30 minutes), which in this example is 15 minutes. At FIG. 6B, computer system 600 detects tap input 650B on resolution indicator 610E.

[0146] At FIG. 6C, in response to detecting tap input 650B on resolution indicator 610E, computer system 600 changes the resolution at which videos will be recorded from high definition (HD) to 4K and updates resolution indicator 610E to reflect the 4K setting. In response to detecting tap input 650B on resolution indicator 610E, computer system 600 also updates max recording time indicator 620A to indicate the maximum amount of time of video that can be recorded with the current video recording settings (e.g., high quality recording, 4K resolution, and 30 FPS). Because 4K recording consumes more memory per minute as compared to HD recording, max recording time indicator 620A indicates a reduced maximum amount of time of 18 minutes at FIG. 6C. At FIG. 6C, while not recording, computer system 600 displays the max recording time indicator 620A because the high quality recording feature is enabled and computer system 600 does not display resource management option 620B because the amount of time of video that can be recorded (e.g., 18 minutes) exceeds the threshold recording duration (e.g., 10 minutes, 15 minutes, or 30 minutes), which in this example is 15 minutes (e.g., the amount of recording time available is more than 15 minutes). At FIG. 6C, while not recording, although the high quality recording feature is enabled, computer system 600 does not automatically start clearing memory (e.g., deleting files and/or removing cached files) because the amount of time of video that can be recorded (e.g., 18 minutes) exceeds the threshold memory clearing duration (e.g., 1 minute, 2 minutes, or 3

minutes), which in this example is 2 minutes (e.g., the amount of recording time available is more than 2 minutes). However, if the change from HD resolution to 4K resolution had caused the maximum amount of time of video that can be recorded to drop below the threshold memory clearing duration, computer system 600 would have automatically started clearing memory, as further described, for example, with respect to FIG. 6O.

[0147] At FIG. 6C, tap input 652A on flash indicator 610B would toggle (e.g., enable) the flash, tap input 652B on resolution indicator 610E would change the recording resolution (e.g., back to HD, thereby increasing the max recording time), tap input 652C would cause computer system 600 to focus on an object (e.g., the rail on top of the ramp) displayed in viewfinder 610A at the location at which tap input 652C was received (without clearing memory, as discussed with respect to tap input 654C at FIG. 6G), tap input 652D would cause computer system 600 to focus on an object (e.g., the side of the ramp) displayed in viewfinder 610A at the location at which tap input 652D was received, tap input 652E on zoom option 610F would cause computer system 600 to change a zoom level (e.g., from 1x zoom to 2x zoom) in viewfinder 610A, tap input 652F on camera selector 610I would change viewfinder 610A from a first set of one or more cameras (e.g., back camera) to a second set of one or more cameras (e.g., front camera) of computer system 600, and tap input 652H on quality indicator 610C would disable the high quality recording feature, thereby causing computer system 600 to cease displaying max recording time indicator 620A. At FIG. 6C, computer system 600 detects tap input 652G on shutter button 610H.

[0148] At FIG. 6D, in response to detecting tap input 652G on shutter button 610H, computer system 600 begins video recording (e.g., capturing motion picture and corresponding audio), as indicated by updated shutter button 610H and progression of recording timer 610D, using the high quality feature. At FIG. 6D, while recording video using the high quality feature, computer system 600 does not display max recording time indicator 620A (e.g., overlaid on viewfinder 610A (and, in some embodiments, content of viewfinder 610A is visible through portions of the indicator)) because the amount of time of video that can be recorded (e.g., 16 minutes because 18 minutes were available and 2 minutes have been recorded thus far) exceeds a threshold duration (e.g., same or different from the threshold recording duration, 9 minutes, 10 minutes, 15 minutes, or 25 minutes), which in this example is 15 minutes. At FIG. 6D, while recording video using the high quality feature, computer system 600 does not display resource management option 620B because the

amount of time of video that can be recorded (e.g., 16 minutes) exceeds the threshold recording duration (e.g., 10 minutes, 15 minutes, or 30 minutes), which in this example is 15 minutes.

[0149] At FIG. 6E, computer system 600 continues to record video, as indicated by shutter button 610H and progression of recording timer 610D, using the high quality feature. At FIG. 6E while recording video using the high quality feature, computer system 600 displays max recording time indicator 620A (e.g., overlaid on viewfinder 610A (and, in some embodiments, content of viewfinder 610A is visible through portions of the indicator)) because the amount of remaining time of video that can be recorded (e.g., 14 minutes because 18 minutes were available and 4 minutes have been recorded thus far) does not exceed the threshold duration (e.g., same or different from the threshold recording duration, 9 minutes, 10 minutes, 15 minutes, or 25 minutes), which in this example is 15 minutes. At FIG. 6E, while recording video using the high quality feature, computer system 600 displays resource management option 620B because the amount of remaining time of video that can be recorded (e.g., 14 minutes) does not exceed the threshold recording duration (e.g., 10 minutes, 15 minutes, or 30 minutes), which in this example is 15 minutes. At FIG. 6E, activating resource management option 620B would cause computer system 600 to start clearing memory (e.g., deleting files and/or removing cached files), as discussed, for example, in further detail with respect to FIGS. 6I-6J. In some embodiments, resource management option 620B is not displayed during recording regardless of the amount of remaining time of video that can be recorded.

[0150] At FIG. 6F, computer system 600 continues to record video, as indicated by shutter button 610H and progression of recording timer 610D, using the high quality feature. At FIG. 6F, while recording video using the high quality feature, computer system 600 displays max recording time indicator 620A (e.g., overlaid on viewfinder 610A (and, in some embodiments, content of viewfinder 610A is visible through portions of the indicator)) because the amount of remaining time of video that can be recorded (e.g., 12 minutes because 18 minutes were available and 6 minutes have been recorded thus far) does not exceed the threshold duration (e.g., same or different from the threshold recording duration, 9 minutes, 10 minutes, 15 minutes, or 25 minutes), which in this example is 15 minutes. At FIG. 6F, while recording video using the high quality feature, computer system 600 displays resource management option 620B because the amount of remaining time of video that can be

recorded (e.g., 12 minutes) does not exceed the threshold recording duration (e.g., 10 minutes, 15 minutes, or 30 minutes), which in this example is 15 minutes. At FIG. 6F, activating resource management option 620B would cause computer system 600 to start clearing memory (e.g., deleting files and/or removing cached files), as discussed, for example, in further detail with respect to FIGS. 6I-6J. In some embodiments, resource management option 620B is not displayed during recording regardless of the amount of remaining time of video that can be recorded. At FIG. 6F, computer system 600 detects tap input 650C on shutter button 610H.

[0151] At FIG. 6G, in response to detecting tap input 650C on shutter button 610H, computer system 600 ceases recording the video, as indicated by updated shutter button 610H and recording timer 610D. At FIG. 6G, while not recording video and with the high quality feature enabled, computer system 600 displays max recording time indicator 620A (e.g., overlaid on viewfinder 610A (and, in some embodiments, content of viewfinder 610A is visible through portions of the indicator)) because the amount of remaining time of video that can be recorded (e.g., 12 minutes) does not exceed the threshold duration, which in this example is 15 minutes (e.g., the amount of recording time available is less than 15 minutes). At FIG. 6G, while not recording video and with the high quality feature enabled, computer system 600 displays resource management option 620B because the amount of remaining time of video that can be recorded (e.g., 12 minutes) does not exceed the threshold recording duration, which in this example is 15 minutes (e.g., the amount of recording time available is less than 15 minutes). In some embodiments where resource management option 620B is not displayed during recording using the high quality feature regardless of the amount of remaining time of video that can be recorded, resource management option 620B is newly displayed when recording stops and the amount of remaining time of video that can be recorded does not exceed the threshold recording duration, as shown in FIG. 6G.

[0152] In some embodiments, as illustrated in FIG. 6G, computer system 600 optionally displays (e.g., overlaid on viewfinder 610A (and, in some embodiments, content of viewfinder 610A is visible through portions of notification 610J)) notification 610J that includes an (e.g., estimated and/or calculated) amount of time it will take to clear an (e.g., estimated and/or calculated) amount of memory to enable recording of an additional (e.g., estimated and/or calculated) amount (e.g., 10 mins) of video with the current video settings. In some embodiments, notification 610J includes an amount of time it will take to clear some

memory and an amount of additional time (and/or total time) that will be available as a result of clearing the memory. In some embodiments, notification 610J is displayed concurrently with resource management option 620B. In some embodiments, notification 610J is optionally displayed concurrently with resource management option 620B when not recording, but is not displayed currently with resource management option 620B during recording (e.g., is displayed in the user interfaces of FIGS. 6I, 6O-6Q, but is not displayed the user interfaces of FIGS. 6E-6F). In some embodiments, notification 610J is not displayed during recording and is not displayed while not recording, regardless of the amount of time of video that can be recorded. In some embodiments, notification 610J is not displayed when the high quality feature is not enabled, regardless of the amount of time of video that can be recorded.

[0153] At FIG. 6G, tap input 654A on flash indicator 610B would toggle (e.g., enable) the flash, tap input 654B on resolution indicator 610E would change the recording resolution (e.g., back to HD, thereby increasing the max recording time), tap input 654C (though at the same location on the touch-sensitive surface/touchscreen as tap input 652C) would cause computer system 600 to start clearing memory (e.g., deleting files and/or removing cached files) (without performing a focus operation), tap input 654D would cause computer system 600 to focus on an object (e.g., the side of the ramp) displayed in viewfinder 610A at the location at which tap input 654D was received, tap input 654E on zoom option 610F would cause computer system 600 to change a zoom level (e.g., from 1x zoom to 2x zoom) in viewfinder 610A, tap input 654F on camera selector 610I would change viewfinder 610A from a first set of one or more cameras (e.g., back camera) to a second set of one or more cameras (e.g., front camera) of computer system 600, tap input 654G on shutter button 610H would start video recording, and tap input 654H on quality indicator 610C would disable the high quality recording feature, thereby causing computer system 600 to cease displaying max recording time indicator 620A and cease displaying resource management option 620B. At FIG. 6G, computer system 600 detects tap input 650D on photo mode of mode selector 610G.

[0154] At FIG. 6H, in response to detecting tap input 650D, computer system 600 changes modes from video recording mode to photo capture mode, as indicated in updated mode selector 610G. At FIG. 6H, because the camera application is now in photo capture mode (and not in video recording mode), the high quality feature is not available for use and quality indicator 610C is not displayed. At FIG. 6H, because the camera application is now

in photo capture mode (and not in video recording mode) and/or because the high quality feature is not available, max recording time indicator 620A and resource management option 620B are not displayed, regardless of the amount of available memory for capturing photos and regardless of the amount of time of video that can be recorded using the video recording mode.

[0155] At FIG. 6H, tap input 656A on flash indicator 610B would toggle (e.g., enable) the flash, tap input 656B on fixed-duration video record option 610K would enable recording of a fixed-duration video when computer system 600 detects a tap input on shutter button 610H, tap input 656C would cause computer system 600 to focus on an object (e.g., the person on top of the ramp) displayed in viewfinder 610A at the location at which tap input 656C was received (without clearing memory, as discussed with respect to tap input 654C at FIG. 6G), tap input 656D would cause computer system 600 to focus on an object (e.g., the side of the ramp) displayed in viewfinder 610A at the location at which tap input 656D was received, tap input 656E on zoom option 610F would cause computer system 600 to change a zoom level (e.g., from 1x zoom to 2x zoom) in viewfinder 610A, tap input 656F on camera selector 610I would change viewfinder 610A from a first set of one or more cameras (e.g., back camera) to a second set of one or more cameras (e.g., front camera) of computer system 600, and tap input 656H would not change the state of the high quality recording feature. At FIG. 6H, computer system 600 detects tap input 650E on video mode of mode selector 610G.

[0156] At FIG. 6I, in response to detecting tap input 650E, computer system 600 changes modes from photo capture mode to video recording mode, as indicated in updated mode selector 610G. At FIG. 6I, while not recording, because the camera application is in video recording mode with the high quality feature enabled (as indicated by quality indicator 610C) and the amount of remaining time of video that can be recorded (e.g., 12 minutes) does not exceed the threshold duration, which in this example is 15 minutes, computer system 600 displays max recording time indicator 620A (e.g., overlaid on viewfinder 610A (and, in some embodiments, content of viewfinder 610A is visible through portions of the indicator)). At FIG. 6I, while not recording video, computer system 600 displays resource management option 620B because the high quality feature is enabled and the amount of time of video that can be recorded (e.g., 12 minutes) does not exceed the threshold recording duration, which in this example is 15 minutes. In some embodiments, as illustrated in FIG. 6I, computer system 600 optionally displays (e.g., overlaid on viewfinder (and, in some embodiments, content of

viewfinder 610A is visible through portions of notification 610J)) notification 610J that includes an (e.g., estimated and/or calculated) amount of time it will take to clear an (e.g., estimated and/or calculated) amount of memory to enable recording of an additional (e.g., estimated and/or calculated) amount (e.g., 10 mins) of video with the current video settings, as further described with respect to FIG. 6G. At FIG. 6I, computer system 600 detects tap input 650F on resource management option 620B.

[0157] In response to detecting tap input 650F, computer system 600 starts clearing memory (e.g., deleting files and/or removing cached files) to make additional memory available for video recording and updates resource management option 620B to indicate that additional memory is being made available (without performing a focus operation). At FIG. 6J, as more memory becomes available for video recording, recording time indicator 620A is updated to reflect the additional available recording time (e.g., the max time has increased between FIGS. 6I and 6J from 12 minutes to 15 minutes). While computer system 600 is clearing memory, activation of the resource management option 620B would cause computer system 600 to stop clearing memory.

[0158] At FIG. 6K, as more memory becomes available for video recording, recording time indicator 620A is updated to reflect the additional available recording time (e.g., the max time has increased between FIGS. 6J and 6K from 15 minutes to 19 minutes). At FIG. 6K, while clearing memory, computer system 600 detects tap input 650G on resource management option 620B.

[0159] At FIG. 6L, in response to detecting tap input 650G, computer system 600 begins cancelling the memory clearing operation and updates resource management option 620B to indicate that memory clearing is being canceled (without performing a focus operation). At FIG. 6M, after cancellation of memory clearing is complete, computer system 600 continues to display max recording time indicator 620A because the high quality recording feature is enabled, regardless of the amount of time of video that can be recorded (e.g., based on available memory). At FIG. 6M, computer system 600 does not display resource management option 620B as part of user interface 610 because the amount of time of video that can be recorded (e.g., 19 minutes, as indicated by max recording time indicator 620A) exceeds the threshold recording duration (e.g., 10 minutes, 15 minutes, or 30 minutes), which in this example is 15 minutes. In some embodiments, computer system 600 continues to update max recording time indicator 620A while max recording time indicator 620A is

displayed and as other applications write files to the memory (thereby reducing the amount of memory available for video recording) and/or delete files from memory (thereby increasing the amount of memory available for recording).

[0160] At FIG. 6N, computer system 600 has received user input to switch to displaying an application other than the camera application and, therefore, is no longer displaying the camera application. Instead, computer system 600 is displaying user interface 630 of an application for downloading files. After switching to the application for downloading files, computer system 600 has downloaded songs, books, tv shows, and movies and saved them in the memory of computer system 600, thereby reducing the amount of memory available for recording videos using the camera application. At FIG. 6N, while the camera application is not displayed, computer system 600 does not automatically clear memory (e.g., does not delete files and/or remove cached files) to make additional memory available for video recording, regardless of the amount of time of video that can be recorded (e.g., based on available memory) using the camera application. While displaying user interface 630 of the application for downloading files, computer system 600 receives user input to display the camera application.

[0161] At FIG. 6O, in response to receiving the user input to display the camera application, computer system 600 displays user interface 610 of the camera application. Because the newly downloaded files that were saved to memory have reduced the available memory for video recording to 1 minute, computer system 600 displays max recording time indicator 620A with an indication that only 1 minute of video recording is available. At FIG. 6O, in response to receiving the user input to display the camera application, because the high quality recording feature is enabled and because the amount of time of video that can be recorded (e.g., 1 minute) does not exceed (e.g., is less than) the threshold memory clearing duration, which in this example is 2 minutes, the computer system automatically (e.g. without receiving further user inputs) starts clearing memory (e.g., deleting files and/or removing cached files). At FIG. 6O, because the high quality recording feature is enabled and because the amount of time of video that can be recorded (e.g., 1 minute) does not exceeds the threshold memory clearing duration, which in this example is 2 minutes, the computer system disables the recording functionality, as indicated by the grayed out shutter button 610H. In some embodiments, clearing memory includes delete files that were saved to memory by an application other than the camera application, such as deleting the songs, books, tv shows,

and/or movies saved to memory by the application for downloading files and/or delete cache files, such as cache files for a web browser, for a mail program, and/or for a mapping/navigation program.

[0162] At FIG. 6O, tap input 658A on flash indicator 610B would toggle (e.g., enable) the flash, tap input 658B on resolution indicator 610E would change the recording resolution (e.g., back to HD, thereby increasing the max recording time) and would enable shutter button 610H for video recording if the increased max recording time exceeds the threshold memory clearing duration, tap input 658C (though at the same location on the touch-sensitive surface/touchscreen as tap input 652C and tap input 654C) on resource management option 620B would cause computer system 600 to stop clearing memory (without performing a focus operation), tap input 658D would cause computer system 600 to focus on an object (e.g., the side of the ramp) displayed in viewfinder 610A at the location at which tap input 658D was received, tap input 658E on zoom option 610F would cause computer system 600 to change a zoom level (e.g., from 1x zoom to 2x zoom) in viewfinder 610A, tap input 658F on camera selector 610I would change viewfinder 610A from a first set of one or more cameras (e.g., back camera) to a second set of one or more cameras (e.g., front camera) of computer system 600, tap input 658G (though at the same location on the touch-sensitive surface/touchscreen as tap input 652G and tap input 660G) on shutter button 610H would not begin video recording because the recording functionality is disabled, as discussed above, and tap input 658H on quality indicator 610C would disable the high quality recording feature, thereby causing computer system 600 to cease displaying max recording time indicator 620A and enabling shutter button 610H for video recording.

[0163] At FIG. 6P, computer system 600 continues to clear memory if resource management option 620B is not activated (e.g., a tap input is not received on resource management option 620B). As memory is cleared, max recording time indicator 620A is updated to indicate the maximum amount of time of video that can be recorded with the current video recording settings (e.g., high quality recording, 4K resolution, and 30 FPS). As shown in FIG. 6P, enough memory has been cleared to enable recording of 3 minutes of video with the current video recording settings. Because the amount of time of video that can be recorded (e.g., 3 minutes) exceeds the threshold memory clearing duration, computer system 600 enables the recording functionality and, optionally, shutter button 610H is no longer grayed out.

[0164] At FIG. 6P, tap input 660A on flash indicator 610B would toggle (e.g., enable) the flash, tap input 660B on resolution indicator 610E would change the recording resolution (e.g., back to HD, thereby increasing the max recording time), tap input 660C (though at the same location on the touch-sensitive surface/touchscreen as tap input 652C and tap input 654C) on resource management option 620B would cause computer system 600 to stop clearing memory (without performing a focus operation), tap input 660D would cause computer system 600 to focus on an object (e.g., the side of the ramp) displayed in viewfinder 610A at the location at which tap input 660D was received, tap input 660E on zoom option 610F would cause computer system 600 to change a zoom level (e.g., from 1x zoom to 2x zoom) in viewfinder 610A, tap input 660F on camera selector 610I would change viewfinder 610A from a first set of one or more cameras (e.g., back camera) to a second set of one or more cameras (e.g., front camera) of computer system 600, tap input 660G (though at the same location on the touch-sensitive surface/touchscreen as tap input 658G) on shutter button 610H would begin video recording because the recording functionality is enabled, and tap input 660H on quality indicator 610C would disable the high quality recording feature, thereby causing computer system 600 to cease displaying max recording time indicator 620A. In some embodiments, beginning recording while memory is being cleared causes computer system 600 to stop clearing memory. In some embodiments, beginning recording while memory is being cleared causes computer system 600 to concurrently clear memory and record video.

[0165] Computer system 600 continues to clear memory if resource management option 620B is not activated (e.g., a tap input is not received on resource management option 620B). In some embodiments, disabling the high quality feature and/or switching to a different mode (e.g., photo capture mode) optionally causes computer system 600 to stop clearing memory. At FIG. 6Q, computer system 600 has finished clearing memory and, as a result, max recording time indicator 620A is updated to indicate the maximum amount of time of video that can be recorded with the current video recording settings (e.g., high quality recording, 4K resolution, and 30 FPS). As shown in FIG. 6Q, enough memory has been cleared to enable recording of 11 minutes of video with the current video recording settings. At FIG. 6Q, while not recording, because the camera application is in video recording mode with the high quality feature enabled (as indicated by quality indicator 610C) and the amount of remaining time of video that can be recorded (e.g., 11 minutes) does not exceed the threshold duration, which in this example is 15 minutes, computer system 600 displays max recording

time indicator 620A (e.g., overlaid on viewfinder 610A (and, in some embodiments, content of viewfinder 610A is visible through portions of the indicator)). At FIG. 6Q, while not recording video, computer system 600 displays resource management option 620B because the high quality feature is enabled and the amount of time of video that can be recorded (e.g., 11 minutes) does not exceed the threshold recording duration, which in this example is 15 minutes. Computer system 600 does not automatically start clearing memory (e.g., deleting files and/or removing cached files) because the amount of time of video that can be recorded (e.g., 11 minutes) exceeds the threshold memory clearing duration (e.g., 1 minute, 2 minutes, or 3 minutes), which in this example is 2 minutes (e.g., the amount of recording time available is more than 2 minutes). However, if a recording option is changed (e.g., higher resolution, higher FPS) to cause the maximum amount of time of video that can be recorded to drop below the threshold memory clearing duration, computer system 600 would automatically started clearing memory. At FIG. 6Q, computer system 600 detects tap input 650H on photo mode of mode selector 610G.

[0166] At FIG. 6R, in response to detecting tap input 650H, computer system 600 changes modes from video recording mode to photo capture mode, as indicated in updated mode selector 610G. At FIG. 6R, because the camera application is now in photo capture mode (and not in video recording mode), the high quality feature is not available for use and quality indicator 610C is not displayed. At FIG. 6R, because the camera application is now in photo capture mode (and not in video recording mode) and/or because the high quality feature is not available, max recording time indicator 620A and resource management option 620B are not displayed, regardless of the amount of available memory for capturing photos and regardless of the amount of time of video that can be recorded using the video recording mode. At FIG. 6R, computer system 600 detects tap input 650I on video mode of mode selector 610G.

[0167] As shown in FIG. 6Q, in response to detecting tap input 650I, computer system 600 changes modes from photo capture mode to video recording mode, as indicated in updated mode selector 610G. At FIG. 6Q, while not recording, because the camera application is in video recording mode with the high quality feature enabled (as indicated by quality indicator 610C) and the amount of remaining time of video that can be recorded (e.g., 11 minutes) does not exceed the threshold duration, which in this example is 15 minutes, computer system 600 displays max recording time indicator 620A (e.g., overlaid on

viewfinder 610A (and, in some embodiments, content of viewfinder 610A is visible through portions of the indicator)). At FIG. 6Q, while not recording video, computer system 600 displays resource management option 620B because the high quality feature is enabled and the amount of time of video that can be recorded (e.g., 11 minutes) does not exceed the threshold recording duration, which in this example is 15 minutes. In some embodiments, as discussed above, computer system 600 optionally displays (e.g., overlaid on viewfinder (and, in some embodiments, content of viewfinder 610A is visible through portions of the notification)) a notification (e.g., notification 610J) that includes an (e.g., estimated and/or calculated) amount of time it will take to clear an (e.g., estimated and/or calculated) amount of memory to enable recording of an additional (e.g., estimated and/or calculated) amount (e.g., 10 mins) of video with the current video settings.

[0168] In some embodiments, computer system 600 switches to the photo capture mode (e.g., at FIG. 6R) and captures and stores photos in memory that reduce the available memory space such that the amount of time of video that can be recorded in the video capture mode using the high quality feature does not exceed the threshold memory clearing duration (e.g., 1 minute, 2 minutes, or 3 minutes), which in this example is 2 minutes (e.g., the amount of recording time available is below 2 minutes). In such circumstances, upon receiving input (e.g., tap input 650I) to transition back to the video capture mode, computer system 600 transitions to the video capture mode and, if the high quality feature is enabled, automatically (e.g., without further user inputs) starts clearing memory.

[0169] In some embodiments, while in the video capture mode with the high quality feature enabled and displaying user interface 610, computer system 600 (e.g., applications other than the camera application) store files in memory that reduce the available memory space such that the amount of time of video that can be recorded in the video capture mode using the high quality feature does not exceed the threshold memory clearing duration (e.g., 1 minute, 2 minutes, or 3 minutes), which in this example is 2 minutes (e.g., the amount of recording time available drops below 2 minutes). In such circumstances, computer system 600 automatically (e.g., without further user inputs) starts clearing memory.

[0170] FIG. 7 is a flow diagram illustrating a method for managing memory using a computer system in accordance with some embodiments. Method 700 is performed at a computer system (e.g., 100, 300, 500, and/or 600 (e.g., a smartphone or a smartwatch)) having one or more cameras (e.g., one or more cameras (e.g., dual cameras, triple camera, or

quad cameras) on the same side or on different sides of the computer system (e.g., a front camera and/or a back camera)) and that is in communication with a display generation component (e.g., a display controller and/or a touch-sensitive display) and one or more input devices (e.g., a touch-sensitive surface and/or a keyboard). Some operations in method 700 are, optionally, combined, the orders of some operations are, optionally, changed, and some operations are, optionally, omitted.

[0171] As described below, method 700 provides an intuitive way for managing recording space for visual media. The method reduces the cognitive burden on a user for managing recording space for visual media, thereby creating a more efficient human-machine interface. For battery-operated computing devices, enabling a user to manage recording space for visual media faster and more efficiently conserves power and increases the time between battery charges.

[0172] The computer system (e.g., 600) displays (702), via the display generation component (e.g., 602), a camera user interface (e.g., 610) (e.g., a user interface associated with (included in, of) a camera application (e.g., an application for capturing media, such as photos and videos)). Displaying the camera user interface (e.g., 610) includes concurrently displaying: a camera preview (704) (e.g., 610A) (e.g., a live preview of a field-of-view from a camera that updates over time) that includes a representation of one or more objects in a field-of-view of a first camera of the one or more cameras; and a recording space affordance (706) (e.g., 620B) that, when selected, initiates performing an operation associated with recording space (e.g., storage space on one or more storage devices (e.g., hard drives, solid state drives, and/or flash drives) of the computer system) available for recording media captured by the one or more cameras (e.g., initiates deleting of cached data (e.g., data associated with improving (e.g., improving the speed of) operations (e.g., browsing, data retrieval) of the operating system and/or one or more applications (e.g., a browser, social media, and/or podcast application, applications other than the application associated with the camera user interface)) and/or initiates cancelling an in-progress deleting of cached data).

[0173] The computer system (e.g., 600) receives (708), via the one or more input devices, input (e.g., 654C, 650F, 650G, 658C, 660C) corresponding to (e.g., a tap input on, a selection of) selection of the recording space affordance (e.g., 620B).

[0174] The computer system (e.g., 600), in response to receiving the input (e.g., 654C, 650F, 650G, 658C, 660C) corresponding to selection of the recording space affordance (e.g., 620B), performs (710) the operation associated with changing an amount of recording space available for recording media captured by the one or more cameras. Displaying a recording space affordance and performing the operation associated with changing an amount of recording space available for recording media upon selection of that affordance provides the user with the ability to affect an amount of recording space available, which can improve the operation of the camera functionality of the computer system. Improving the operation of the camera functionality of the computer system enhances the operability of the system and makes the user-system interfaces more efficient (e.g., by helping the user to provide proper inputs and reducing user mistakes when operating/interacting with the system). These techniques also reduce power usage and improve battery life of the system by enabling the user to use the device more quickly and efficiently. Displaying the recording space affordance concurrently with the camera preview in the camera user interface provides the user with the ability to perform the operation (e.g., an operation to make additional recording space available) without having to navigate through multiple menus and/or having to navigate away from the live preview, which improves the user's ability to capture camera media of a potentially transient event (e.g., a transient moment/composition). Improving the user's ability to better capture transient events improves the operation of the camera functionality of the computer system, enhancing the operability of the system, and making the user-system interfaces more efficient (e.g., by helping the user to provide proper inputs and reducing user mistakes when operating/interacting with the system). These techniques also reduce power usage and improve battery life of the system by enabling the user to use the device more quickly and efficiently.

[0175] In some embodiments, in accordance with a determination that the recording space available for recording media captured by the one or more cameras is (e.g., at a time the input corresponding to selection of the recording space affordance is received; at a time when the recording space affordance is caused to be displayed) greater than a first threshold amount (e.g., greater than an amount required to record a threshold amount (e.g., 5, 10, 15, 20, or 30 minutes of video) of media (e.g., video media) at a current camera setting (e.g., HD video, 4K video, video at a 30 frames-per-second, video at 60 frames-per-second, and/or video stored in a first file format (e.g., an uncompressed or less compressed format))) of available space, the operation associated with changing an amount of recording space

available for recording media captured by the one or more cameras includes increasing (712) (e.g., by deleting data (e.g., data cached by one or more applications) currently occupying the recording space) the amount of recording space available for recording media captured by the one or more cameras (e.g., tap input 650F). In accordance with a determination that the recording space available for recording media captured by the one or more cameras is (e.g., at a time the input corresponding to selection of the recording space affordance is received; at a time when the recording space affordance is caused to be displayed) below the threshold amount of media (e.g., video media) at a current camera setting (e.g., HD video, 4K video, video at a 30 frames-per-second, video at 60 frames-per-second, and/or video stored in a first file format (e.g., an uncompressed or less compressed format)) of available space, the operation associated with changing an amount of recording space available for recording media captured by the one or more cameras includes cancelling (714) an operation (e.g., an in-progress operation) to increase (e.g., by deleting data (e.g., data cached by one or more applications) currently occupying the recording space) the amount of recording space available for recording media captured by the one or more cameras (e.g., tap input 650G). Conditionally configuring the recording space affordance to cause performance of an operation to increase the amount of recording space available for recording media captured by the one or more cameras when the recording space available is greater than a first threshold amount performs an operation (e.g., configuring the function of the recording space affordance) when a set of conditions has been met without requiring further user input, and/or additional techniques and also provides additional control options without cluttering the user interface with additional displayed controls.

[0176] In some embodiments, the operation associated with changing an amount of recording space available for recording media captured by the one or more cameras includes the computer system (e.g., 600) increasing (e.g., by deleting data (e.g., data cached by one or more applications) currently occupying the recording space) the amount of recording space available for recording media captured by the one or more cameras. Displaying recording space affordance concurrently with the camera preview in the camera user interface provides the user with the ability to perform an operation to increase the amount of recording space without having to navigate through multiple menus and/or having to navigate away from the live preview, which improves the user's ability to capture camera media (or capture a longer duration of media) of a potentially transient event (e.g., a transient moment/composition). Improving the user's ability to better capture transient events improves the operation of the

camera functionality of the computer system (e.g., 600), enhancing the operability of the system, and making the user-system interfaces more efficient (e.g., by helping the user to provide proper inputs and reducing user mistakes when operating/interacting with the system). These techniques also reduce power usage and improve battery life of the system by enabling the user to use the device more quickly and efficiently.

[0177] In some embodiments, while increasing the amount of recording space available for recording media captured by the one or more cameras is in progress (e.g., has been initiated but not completed), the computer system (e.g., 600) displays, via the display generation component, an indication (e.g., a textual (e.g., a percentage) or graphical representation (e.g., a progress bar; an elapsed time and a remaining time, and/or an animated spinner)) of progress towards completion of increasing the amount of recording space available for recording media captured by the one or more cameras (e.g., 620A, 620B in FIGS. 6I-6K). Displaying the indication of progress towards completion of increasing the amount of recording space available for recording media captured by the one or more cameras provides improved visual feedback as to the current progress of the increasing operation.

[0178] In some embodiments, while increasing the amount of recording space available for recording media captured by the one or more cameras is in progress (e.g., has been initiated but not completed), the computer system (e.g., 600) receives, via the one or more input devices, a second input corresponding to selection of the recording space affordance (e.g., 650G). In some embodiments, the visual appearance of the recording space affordance is different while the operation is in progress than when the operation is not in progress (e.g., 620B at FIG. 6I as compared to 620B in FIGS. 6J-6L). In response to receiving the second input (e.g., 650G), the computer system (e.g., 600) cancels (e.g., ceasing or aborting) at least a portion of increasing the amount of recording space available for recording media captured by the one or more cameras (e.g., as shown in FIG. 6L). In some embodiments, cancelling at least the portion of the increasing operation occurs after at least a portion of the increasing operation has been completed (e.g., at least some recording space has been made available). In some embodiments, cancelling at least the portion of the increasing operation includes reversing at least a portion of the increasing operation that has been completed (e.g., restoring data that was deleted to make space available). Cancelling the increasing operation, while in progress, in response to a selection of the recording space affordance provides the user with

the ability to cancel the operation, which can improve the operation of the camera functionality of the computer system. Improving the operation of the camera functionality of the computer system enhances the operability of the system and make the user-system, interfaces more efficient (e.g., by helping the user to provide proper inputs and reducing user mistakes when operating/interacting with the system). These techniques also reduce power usage and improve battery life of the system by enabling the user to use the device more quickly and efficiently.

[0179] In some embodiments, after (In some embodiments, while the increasing is in progress) increasing the amount of recording space available for recording media captured by the one or more cameras is in progress (e.g., has been initiated but not completed), the computer system (e.g., 600) receives, via the one or more input devices, a request (e.g., 660G) to capture media with the one or more cameras (e.g., selection of a physical or virtual shutter button such as a tap on (e.g., at a location corresponding to) a shutter button (e.g., 610H) (e.g., a selectable user interface object for capturing media)) (in some embodiments, the shutter button is displayed concurrently with the recording space affordance). In response to receiving the request to capture media with the one or more cameras, the computer system (e.g., 600) captures first media (in some embodiments, and recording the first media (e.g., in recording space made available via the process of increasing the amount of recording space available for recording media captured by the one or more cameras)).

[0180] In some embodiments, the operation associated with changing an amount of recording space available for recording media captured by the one or more cameras includes cancelling an operation (e.g., an in-progress operation) to increase (e.g., by deleting data (e.g., data cached by one or more applications) currently occupying the recording space) the amount of recording space available for recording media captured by the one or more cameras. Providing an affordance that cancels an operation to increase the amount of recording space concurrently with the live preview provides the user with access to a control to cancel the operation without having to navigate through multiple menus and/or having to navigate away from the live preview, which provides enhanced and readily-accessed control options. Providing enhanced and readily-accessed control options improves the operation of the camera functionality of the computer system, enhancing the operability of the system and making the user-system interfaces more efficient (e.g., by helping the user to provide proper inputs and reducing user mistakes when operating/interacting with the system). These

techniques also reduce power usage and improve battery life of the system by enabling the user to use the device more quickly and efficiently.

[0181] In some embodiments, prior to receiving the input corresponding to selection of the recording space affordance, the computer system (e.g., 600) detects a first event (e.g., a change in a state of the computer system; a user input (e.g., an input to enable a specific media capture mode (e.g., a capture mode for HD video, 4K video, video at a 30 frames-per-second, video at 60 frames-per-second, and/or video stored in a first file format (e.g., an uncompressed or less compressed format)))). In response to detecting the first event and in accordance with a determination that a set of operation initiation criteria are met, wherein the set of operation initiation criteria includes a criterion that is met when the recording space available for recording media captured by the one or more cameras is less than the second threshold amount, the computer system (e.g., 600) initiates (e.g., as in FIG. 6O) the operation to increase the amount of recording space available for recording media captured by the one or more cameras. In response to detecting the first event and in accordance with a determination that the set of operation initiation criteria are not met, the computer system (e.g., 600) forgoes initiating (e.g., as in FIGS. 6B and 6I) the operation to increase the amount of recording space available for recording media captured by the one or more cameras. Initiating the operation to increase the amount of recording space available for recording media captured by the one or more cameras when the set of operation initiation criteria are met performs the operation when a set of conditions has been met without requiring further user input, and/or additional techniques.

[0182] In some embodiments, the first event includes transitioning from a first media capture mode (e.g., a camera capture mode (e.g., photo capture mode, a standard video capture mode), as shown in FIGS. 6H-6I) (in some embodiments, the first event is a transition in media capture quality settings (e.g., HD to 4K), as shown in FIGS. 6B-6C, a transition in frame rate (e.g., 30 FPS to 60 FPS), and/or a transition in a video codec (e.g., from a high compression codec (e.g., H.264 or H.265) to a lower (or no) compression codec (e.g., ProRes or CineForm))) to a second media capture mode (e.g., a high-definition video capture mode; a video capture mode that includes storing the captured video in an uncompressed or less compressed format, as shown in FIGS. 6A-6B). Initiating the operation to increase the amount of recording space available for recording media captured by the one or more cameras when the media capture mode transitions and when the set of operation initiation

criteria are met performs the operation when a set of conditions has been met without requiring further user input, and/or additional techniques.

[0183] In some embodiments, the operation associated with changing an amount of recording space available for recording media captured by the one or more cameras includes deleting at least some data (e.g., podcasts, applications, music, media (e.g., television shows and/or movies) recorded at one or more external devices and transmitted to the computer system; cached data) that is not camera data (e.g., data that is not data captured by the one or more cameras, and/or is not video or image data from a captured media collection associated with the user).

[0184] In some embodiments, the operation associated with changing an amount of recording space available for recording media captured by the one or more cameras includes deleting data (e.g., previously captured videos and/or photos) that was previously captured by the one or more cameras and that meets a set of backup criteria (e.g., the data has been backed up to one or more storage devices (e.g., cloud storage on one or more remote servers and/or storage of an external drive) other than storage of the computer system). Deleting data when that data meets a set of backup criteria performs an operation when a set of conditions has been met without requiring further user input, and/or additional techniques, reduces the risk of deleting data that is unrecoverable, and reduces the need for the user to manually confirm that data has been backed up elsewhere and therefore can be safely deleted.

[0185] In some embodiments, displaying the camera user interface (e.g., 610) includes the computer system (e.g., 600) displaying, concurrently with the camera preview (e.g., 610A) and the recording space affordance (e.g., 620B), an indication (e.g., 620A) (e.g., a textual (e.g., "15 minutes remaining") and/or graphical indication) of an amount of time available to record and store, in the recording space, media captured by the one or more cameras. Displaying an indication of an amount of time available to record and store, in the recording space, media captured by the one or more cameras provides the user with improved visual feedback as to the amount of recording space that is available.

[0186] In some embodiments, the indication (e.g., 620A) of the amount of time available to record and store, in the recording space, media captured by the one or more cameras is based on (e.g., varies depending on a bitrate (e.g., an amount of data stored per unit time (e.g., per minute) of a current capture mode)) a current media capture mode of the computer

system (e.g., for a 30 FPS capture mode the time is 30 minutes and for a 60 FPS capture mode at the same resolution the time is 15 minutes; for HD the time is 40 minutes and for 4K, it is 10 minutes; for a high-compression codec (e.g., H.265) the time is 30 minutes and for a low compression codec (e.g., ProRes), the time is 10 minutes). Displaying an indication of an amount of time available to record and store, in the recording space, media captured by the one or more cameras that is based on the current media capture mode provides the user with improved visual feedback as to the amount of recording space that is available, specifically for the current mode.

[0187] In some embodiments, in accordance with a determination that the amount of time available to record and store, in the recording space, media captured by the one or more cameras is a first value (e.g., a value above a threshold value (e.g., greater than 2, 5, or 10 minutes)), the recording space affordance (in some embodiments, and/or the indication of an amount of time available to record and store) has a first visual appearance (e.g., 620B at FIG. 6K) (e.g., a first color scheme; a first size; a first fill pattern); and in accordance with a determination that the amount of time available to record and store, in the recording space, media captured by the one or more cameras is a second value (e.g., a value below a threshold value), the recording space affordance has a second visual appearance (e.g., 620B at FIG. 6O), different from the first visual appearance. Displaying the recording space affordance with different visual appearances based on the amount of time available to record and store provides the user with improved visual feedback as to the available amount of recording space.

[0188] In some embodiments, while a first amount of recording space is available for recording media captured by the one or more cameras and while the indication of the amount of time available to record and store, in the recording space, media captured by the one or more cameras indicates a first amount of time (e.g., "10 minutes remaining" or "15 minutes remaining") (e.g., 620A at FIG. 6J), the computer system (e.g., 600) determines that the amount of recording space available for recording media captured by the one or more cameras has increased to a second amount of recording space. In response to determining that the amount of recording space available for recording media captured by the one or more cameras has increased to the second amount of recording space, the computer system (e.g., 600) updates the indication of the amount of time available (e.g., 620A at FIG. 6K) to record and store, in the recording space, media captured by the one or more cameras to indicate a

second amount of time (e.g., "20 minutes remaining" or "25 minutes remaining"), greater than the first amount of time. Updating the indication of an amount of time available to record and store, in the recording space, media captured by the one or more cameras as more space becomes available provides the user with improved visual feedback as to change in the amount of recording space that is available.

[0189] In some embodiments, while a third amount of recording space is available for recording media captured by the one or more cameras and while the indication of the amount of time available to record and store, in the recording space, media captured by the one or more cameras indicates a third amount of time (e.g., 620A at FIG. 6E) (e.g., "15 minutes remaining" or "20 minutes remaining"), the computer system (e.g., 600) captures first media via the one or more cameras and storing the first media in the recording space. In response to capturing the first media via the one or more cameras and storing the first media in the recording space, the computer system (e.g., 600) updates the indication of the amount of time available to record and store, in the recording space, media captured by the one or more cameras to indicate a fourth amount of time (e.g., 620A at FIG. 6F), less than the third amount of time (e.g., "14 minutes remaining" or "10 minutes remaining"). Updating the indication of an amount of time available to record and store, in the recording space, media captured by the one or more cameras as media is captured and space is consumed provides the user with improved visual feedback as to change in the amount of recording space that is available.

[0190] In some embodiments, the recording space affordance is displayed while capture of media via the one or more cameras is not occurring (e.g., prior to the start of a media capture operation) (e.g., 620B at FIG. 6C). Displaying the recording space affordance while capture of media via the one or more cameras is not occurring provides the user with improved visual feedback as to the availability of the operation associated with the recording space affordance at that point in time.

[0191] In some embodiments, the recording space affordance is displayed while capture of media via the one or more cameras is occurring (e.g., ongoing; during a media capture operation). Displaying the recording space affordance while capture of media via the one or more cameras is occurring provides the user with improved visual feedback as to the availability of the operation associated with the recording space affordance at that point in time.

[0192] In some embodiments, during ongoing capture of media with the one or more cameras of the device (e.g., while displaying the camera user interface in a currently recording mode of operation) and while the recording space affordance is not displayed (e.g., at FIG. 6D), the computer system determines that the recording space available for recording media captured by the one or more cameras has fallen below a third threshold amount (e.g., an amount required to record a threshold amount (e.g., 15 minutes of video, 20 minutes of video, or 30 minutes of video) of media (e.g., video media) at a current camera setting (e.g., HD video, 4K video, video at a 30 frames-per-second, video at 60 frames-per-second, and/or video stored in a first file format (e.g., an uncompressed or less compressed format))); in response to determining that the recording space available for recording media captured by the one or more cameras has fallen below the third threshold amount, the computer system (e.g., 600) displays (e.g., initially displaying) the recording space affordance (in some embodiments, the recording space affordance is displayed during media capture when the amount of recording space falls below a threshold level) (e.g., 620B at FIG. 6E). Initially displaying the recording space affordance while capture of media via the one or more cameras is occurring and when available space drops below the threshold amount provides the user with improved visual feedback as to the change in available space and performs an operation (e.g., displaying the recording space affordance) when a set of conditions has been met without requiring further user input, and/or additional techniques.

[0193] In some embodiments, the recording space affordance (e.g., 620B) is overlaid on the camera preview (e.g., 610A) (e.g., overlaid on at least a portion of a representation of the field of view of the one or more cameras). Overlaying the recording space affordance on the camera preview conserves space in the camera user interface and makes the affordance available without the user having to navigate through multiple menus and/or away from the live preview, which improves the user's ability to capture camera media of a potentially transient event (e.g., a transient moment/composition). Improving the user's ability to better capture transient events improves the operation of the camera functionality of the computer system, enhancing the operability of the system, and making the user-system interfaces more efficient (e.g., by helping the user to provide proper inputs and reducing user mistakes when operating/interacting with the system). These techniques also reduce power usage and improve battery life of the system by enabling the user to use the device more quickly and efficiently.

[0194] In some embodiments, displaying the camera user interface (e.g., 610) includes the computer system displaying, concurrently with the camera preview (e.g., 610A) and the recording space affordance (e.g., 620B), a media capture affordance (e.g., 610H) (e.g., a virtual shutter button) that, when selected, initiates capture of media (e.g., video and/or photos) via the one or more cameras. Displaying media capture affordance concurrently with the recording space affordance makes the recording space affordance available concurrently with the media capture affordance without the user having to navigate through multiple menus and/or away from the live preview, which improves the user's ability to capture camera media of a potentially transient event (e.g., a transient moment/composition). Improving the user's ability to better capture transient events improves the operation of the camera functionality of the computer system, enhancing the operability of the system, and making the user-system interfaces more efficient (e.g., by helping the user to provide proper inputs and reducing user mistakes when operating/interacting with the system). These techniques also reduce power usage and improve battery life of the system by enabling the user to use the device more quickly and efficiently.

[0195] In some embodiments, the computer system (e.g., 600) receives, via the one or more input devices, input (e.g., 652G) corresponding to the media capture affordance (e.g., 610H). In response to receiving the input (e.g., 652G) corresponding to the media capture affordance (e.g., 610H), the computer system initiates the capture of media (e.g., capture of video; capture of one or more photos) via the one or more cameras. Providing the media capture affordance and initiating capture of media on selection of the affordance provides the user with improved visual feedback as to how to initiate media capture.

[0196] In some embodiments, the computer system (e.g., 600) displays, in the camera user interface (e.g., 610), a media capture affordance (e.g., 610H) (e.g., a virtual shutter button) (e.g., an affordance that, when enabled/selectable and selected, initiates capture of media (e.g., video and/or photos) via the one or more cameras) that includes: in accordance with a determination that the recording space available for recording media captured by the one or more cameras is above a fourth threshold amount (e.g., an amount required to record a threshold amount (e.g., 2 minutes of video, 5 minutes of video, 10 minutes of video) of media (e.g., video media) at a current camera setting (e.g., HD video, 4K video, video at a 30 frames-per-second, video at 60 frames-per-second, and/or video stored in a first file format (e.g., an uncompressed or less compressed format))), the computer system displaying the

media capture affordance in a first visual state (e.g., 610H at FIG. 6P) (e.g., non-greyed out), wherein the media capture affordance is selectable (e.g., is enabled or is available for use) while in the first visual state; and in accordance with a determination that the recording space available for recording media captured by the one or more cameras is below the fourth threshold amount, the computer system displaying the media capture affordance in a second visual state (e.g., 610H at FIG. 6O) (e.g., greyed out), wherein the media capture affordance is not selectable (e.g., is not enabled or is not available for use to initiate media capture) while in the second visual state. Conditionally displaying the media capture affordance in a first or second visual state that is connected to selectability of the affordance and is based on whether available recording space is above or below a fourth threshold amount provides users with improved visual feedback as to the available amount of space and performs an operation (e.g., altering the media capture affordance) when a set of conditions has been met without requiring further user input, and/or additional techniques.

[0197] In some embodiments, while the media capture affordance is displayed in the second visual state (e.g., 610H at FIG. 6O), the computer system (e.g., 600) determines that the amount of recording space available for recording media captured by the one or more cameras has increased above the fourth threshold amount. In response to determining that the amount of recording space available for recording media captured by the one or more cameras has increased above the fourth threshold amount, the computer system (e.g., 600) updates the media capture affordance from the second visual state to the first visual state (e.g., 610H at FIG. 6P). Modifying the visual state and selectability state of the media capture affordance when the available recording space increases above the fourth threshold value provides users with improved visual feedback as to the available amount of space and performs an operation (e.g., altering the media capture affordance) when a set of conditions has been met without requiring further user input, and/or additional techniques.

[0198] In some embodiments, while the media capture affordance is displayed in the second visual state (e.g., 610H at FIG. 6O), the computer system (e.g., 600) detects a request (e.g., 658H, 658B) to modify one or more media capture settings (e.g., file size or the amount of data that is stored (e.g., per unit time) while capturing media) (in some embodiments, the media capture bitrate is changed when one or more quality settings of the captured video are changed (e.g., resolution (e.g., via 610E), framerate (e.g., via 610E), data storage format, and/or video codec (e.g., via 610C))). In response to detecting the request to modify the one

or more media capture settings: the computer system modifies the one or more media settings, wherein modifying the one or more media settings reduces the bitrate of captured media; and updates the media capture affordance from the second visual state to the first visual state (e.g., 610H at FIG. 6P). Modifying the visual state and selectability state of the media capture affordance when the media capture settings are modified provides users with improved visual feedback as to modification to the media settings and performs an operation (e.g., altering the media capture affordance) when a set of conditions has been met without requiring further user input, and/or additional techniques.

[0199] In some embodiments, displaying the camera user interface (e.g., 610) includes the computer system displaying, concurrently with the camera preview (e.g., 610A) and the recording space affordance (e.g., 620B), a set of one or more media capture setting affordances (e.g., affordances for changing the media capture quality (e.g., 610C), media capture resolution (e.g., 610E), media capture bitrate (e.g., 610C); media capture framerate (e.g., 610E); zoom level (e.g., 610F); and/or flash state (e.g., 610B)). Displaying a set of one or more media capture setting affordances concurrently with the recording space affordance and the live preview provides the user with access to the settings affordances without the user having to navigate through multiple menus and/or away from the live preview, which improves the user's ability to capture camera media of a potentially transient event (e.g., a transient moment/composition). Improving the user's ability to better capture transient events improves the operation of the camera functionality of the computer system, enhancing the operability of the system, and making the user-system interfaces more efficient (e.g., by helping the user to provide proper inputs and reducing user mistakes when operating/interacting with the system). These techniques also reduce power usage and improve battery life of the system by enabling the user to use the device more quickly and efficiently.

[0200] In some embodiments, the set of one or more media capture setting affordances includes a first media capture setting affordance (e.g., 610C and/or 610E) that, when selected, changes the media capture bitrate (e.g., file size or the amount of data that is stored (e.g., per unit time) while capturing media) (in some embodiments, the media capture bitrate is changed when one or more quality settings of the captured video are changed (e.g., resolution, framerate)).

[0201] In some embodiments, the set of one or more media capture setting affordances includes two or more different media capture setting affordances independently selected from the group consisting of: a media capture setting affordance (e.g., 610C) that modifies a media codec setting (an uncompressed media codec or a low compression media codec (e.g., a codec (e.g., ProRes (e.g., ProRes 4444 or ProRes 4444 XQ) or CineForm) having a bitrate that is higher than compressed or more compressed media codec (e.g., H.264 or H.265))), a media capture setting affordance that modifies a frame rate setting (e.g., 30 FPS, 60 FPS), and a media capture setting affordance that modifies a pixel density setting (e.g., 610E) (e.g., video resolution setting (e.g., HD resolution, a 4K resolution)).

[0202] In some embodiments, while the computer system (e.g., 600) is in a third media capture mode (e.g., a photo capture mode) (e.g., at FIG. 6H) and while the recording space affordance (e.g., 620B) is not displayed, the computer system (e.g., 600) detects a request (e.g., 650E) to transition to a fourth media capture mode (e.g., a video capture mode). In response to the request to transition to the fourth media capture mode: the computer system (e.g., 600) transitions to the fourth media capture mode (e.g., at FIG. 6I); and displays the recording space affordance (e.g., 620B) (e.g., as part of the camera user interface). Displaying the recording space affordance when transitioning to the fourth media capture mode provides the user with improved visual feedback as to the current mode and the relevance of the recording space affordance to the fourth media capture mode and provides additional control options (e.g., when in the fourth media capture mode) without cluttering the user interface with additional displayed controls (e.g., when in the third media capture mode). Displaying the recording space affordance with the live preview on transitioning into the fourth media capture mode provide the user with access to the recording space affordance in an appropriate mode without the user having to navigate through multiple menus and/or away from the live preview, which improves the user's ability to capture camera media of a potentially transient event (e.g., a transient moment or composition). Improving the user's ability to better capture transient events improves the operation of the camera functionality of the computer system, enhancing the operability of the system, and making the user-system interfaces more efficient (e.g., by helping the user to provide proper inputs and reducing user mistakes when operating/interacting with the system). These techniques also reduce power usage and improve battery life of the system by enabling the user to use the device more quickly and efficiently.

[0203] In some embodiments, the computer system (e.g., 600) displays a second camera user interface (e.g., a second instance of the camera user interface displayed at a different time). Displaying the second camera user interface includes: in accordance with a determination that the recording space available for recording media captured by the one or more cameras is below a fifth threshold amount (e.g., an amount required to record a threshold amount (e.g., 10 minutes of video, 15 minutes of video, 20 minutes of video) of media (e.g., video media) at a current camera setting (e.g., HD video, 4K video, video at a 30 frames-per-second, video at 60 frames-per-second, and/or video stored in a first file format (e.g., an uncompressed or less compressed format))), the computer system displaying the camera preview concurrently with the recording space affordance (e.g., at FIG. 6I); and in accordance with a determination that the recording space available for recording media captured by the one or more cameras is above the fifth threshold amount, the computer system displaying the camera preview without the recording space affordance (e.g., at FIG. 6B). Conditionally displaying the recording space affordance based on whether available recording space is above or below a fifth threshold amount provides users with improved visual feedback as to modification to the media settings, performs an operation (e.g., displaying the media capture affordance) when a set of conditions has been met without requiring further user input, and/or additional techniques, and provides additional control options without cluttering the user interface with additional displayed controls (e.g., when the control may be less relevant).

[0204] In some embodiments, displaying the camera preview without the recording space affordance includes the computer system (e.g., 600) displaying, concurrently with the camera preview (e.g., 610A), a second indication (e.g., 620A) (e.g., a textual (e.g., "15 minutes remaining") and/or graphical indication) of an amount of time available to record and store, in the recording space, media captured by the one or more cameras. Displaying the second indication of the amount of time available to record and store, in the recording space, media captured by the one or more cameras without displaying the recording space affordance provides improved visual feedback as to the amount of time available to record and store, in the recording space, media captured by the one or more cameras.

[0205] In some embodiments, the recording space affordance (e.g., 620B), when displayed in the second camera user interface, is displayed at a first location in the second camera user interface. While displaying the second camera user interface, the computer

system (e.g., 600) receives, via the one or more input devices an input (e.g., 650F, 650G, 652C) corresponding to the first location. In response to receiving the input corresponding to the first location: in accordance with a determination that the recording space affordance is currently displayed in the second camera user interface (e.g., as in FIGS. 6I and 6K), the computer system (e.g., 600) performs the operation associated with changing an amount of recording space available for recording media captured by the one or more cameras; and in accordance with a determination that the recording space affordance is not currently displayed in the second camera user interface (e.g., as in FIG. 6C), the computer system performs a camera operation (e.g., set focus point (e.g., via tap input (e.g., 652C and/or 656C) at the first location), set auto exposure point (e.g., via a tap-and-drag gesture), select subject to emphasize (e.g., via tap-and-hold (e.g., 652C and/or 656C) on a subject), and/or set exposure compensation) that does not include performing the operation associated with changing an amount of recording space available for recording media captured by the one or more cameras. Performing the operation associated with changing an amount of recording space available for recording media captured by the one or more cameras or performing a camera operation, depending on whether the recording space affordance is currently displayed performs a specific operation when a set of conditions has been met without requiring further user input, and/or additional techniques.

[0206] In some embodiments, the recording space affordance (e.g., 620B) is displayed concurrently with an indication (e.g., 610J) (e.g., a textual (e.g., "get 15 extra minutes") and/or graphical indication) of an additional amount of time available to record and store, in the recording space, media captured by the one or more cameras that would be made available by performing the operation associated with changing an amount of recording space available for recording media captured by the one or more cameras. In some embodiments, the indication also includes an indication of an amount of time (e.g., estimated time (e.g., 5 seconds, 10 seconds, 20 seconds, or 30 seconds) that is required to complete the operation, once the operation is initiated). Displaying an indication of an additional amount of time available to record and store, in the recording space, media captured by the one or more cameras that would be made available by performing the operation associated with changing an amount of recording space available for recording media captured by the one or more cameras provides the user with improved visual feedback as to how much time would be made available by the operation and a much time is required to complete the operation. Displaying an indication of how much additional recording time would be made available

(and, in some embodiments, that includes an indication of an amount of time needed to complete the operation) assists the user with capture camera media of a potentially transient event (e.g., a transient moment/composition of a certain expected duration). Improving the user's ability to better capture transient events improves the operation of the camera functionality of the computer system, enhancing the operability of the system, and making the user-system interfaces more efficient (e.g., by helping the user to provide proper inputs and reducing user mistakes when operating/interacting with the system). These techniques also reduce power usage and improve battery life of the system by enabling the user to use the device more quickly and efficiently.

[0207] The foregoing description, for purpose of explanation, has been described with reference to specific embodiments. However, the illustrative discussions above are not intended to be exhaustive or to limit the invention to the precise forms disclosed. Many modifications and variations are possible in view of the above teachings. The embodiments were chosen and described in order to best explain the principles of the techniques and their practical applications. Others skilled in the art are thereby enabled to best utilize the techniques and various embodiments with various modifications as are suited to the particular use contemplated.

[0208] Although the disclosure and examples have been fully described with reference to the accompanying drawings, it is to be noted that various changes and modifications will become apparent to those skilled in the art. Such changes and modifications are to be understood as being included within the scope of the disclosure and examples as defined by the claims.

[0209] As described above, one aspect of the present technology is the gathering and use of data available from various sources to improve management of recording space for visual media. The present disclosure contemplates that in some instances, this gathered data may include personal information data that uniquely identifies or can be used to contact or locate a specific person. Such personal information data can include demographic data, location-based data, telephone numbers, email addresses, twitter IDs, home addresses, data or records relating to a user's health or level of fitness (e.g., vital signs measurements, medication information, exercise information), date of birth, or any other identifying or personal information.

[0210] The present disclosure recognizes that the use of such personal information data, in the present technology, can be used to the benefit of users. For example, the personal information data can be used to determine which content to delete. Accordingly, use of such personal information data enables users to have calculated control of the memory. Further, other uses for personal information data that benefit the user are also contemplated by the present disclosure.

[0211] The present disclosure contemplates that the entities responsible for the collection, analysis, disclosure, transfer, storage, or other use of such personal information data will comply with well-established privacy policies and/or privacy practices. In particular, such entities should implement and consistently use privacy policies and practices that are generally recognized as meeting or exceeding industry or governmental requirements for maintaining personal information data private and secure. Such policies should be easily accessible by users, and should be updated as the collection and/or use of data changes. Personal information from users should be collected for legitimate and reasonable uses of the entity and not shared or sold outside of those legitimate uses. Further, such collection/sharing should occur after receiving the informed consent of the users. Additionally, such entities should consider taking any needed steps for safeguarding and securing access to such personal information data and ensuring that others with access to the personal information data adhere to their privacy policies and procedures. Further, such entities can subject themselves to evaluation by third parties to certify their adherence to widely accepted privacy policies and practices. In addition, policies and practices should be adapted for the particular types of personal information data being collected and/or accessed and adapted to applicable laws and standards, including jurisdiction-specific considerations. For instance, in the US, collection of or access to certain health data may be governed by federal and/or state laws, such as the Health Insurance Portability and Accountability Act (HIPAA); whereas health data in other countries may be subject to other regulations and policies and should be handled accordingly. Hence different privacy practices should be maintained for different personal data types in each country.

[0212] Despite the foregoing, the present disclosure also contemplates embodiments in which users selectively block the use of, or access to, personal information data. That is, the present disclosure contemplates that hardware and/or software elements can be provided to prevent or block access to such personal information data. For example, in the case of

memory management, the present technology can be configured to allow users to select to "opt in" or "opt out" of participation in the collection of personal information data during registration for services or anytime thereafter. In addition to providing "opt in" and "opt out" options, the present disclosure contemplates providing notifications relating to the access or use of personal information. For instance, a user may be notified upon downloading an app that their personal information data will be accessed and then reminded again just before personal information data is accessed by the app.

[0213] Moreover, it is the intent of the present disclosure that personal information data should be managed and handled in a way to minimize risks of unintentional or unauthorized access or use. Risk can be minimized by limiting the collection of data and deleting data once it is no longer needed. In addition, and when applicable, including in certain health related applications, data de-identification can be used to protect a user's privacy. De-identification may be facilitated, when appropriate, by removing specific identifiers (e.g., date of birth, etc.), controlling the amount or specificity of data stored (e.g., collecting location data a city level rather than at an address level), controlling how data is stored (e.g., aggregating data across users), and/or other methods.

[0214] Therefore, although the present disclosure broadly covers use of personal information data to implement one or more various disclosed embodiments, the present disclosure also contemplates that the various embodiments can also be implemented without the need for accessing such personal information data. That is, the various embodiments of the present technology are not rendered inoperable due to the lack of all or a portion of such personal information data. For example, content can be selected for deletion by inferring preferences based on non-personal information data or a bare minimum amount of personal information, such as the content being requested by the device associated with a user, other non-personal information available to the system, or publicly available information.

CLAIMS

What is claimed is:

1. A method, comprising:

at a computer system having one or more cameras, wherein the computer system is in communication with a display generation component and one or more input devices:

displaying, via the display generation component, a camera user interface, wherein displaying the camera user interface includes concurrently displaying:

a camera preview that includes a representation of one or more objects in a field-of-view of a first camera of the one or more cameras; and

a recording space affordance that, when selected, initiates performing an operation associated with recording space available for recording media captured by the one or more cameras;

receiving, via the one or more input devices, input corresponding to selection of the recording space affordance; and

in response to receiving the input corresponding to selection of the recording space affordance, performing the operation associated with changing an amount of recording space available for recording media captured by the one or more cameras.

2. The method of claim 1, wherein:

in accordance with a determination that the recording space available for recording media captured by the one or more cameras is greater than a first threshold amount of available space, the operation associated with changing an amount of recording space available for recording media captured by the one or more cameras includes increasing the amount of recording space available for recording media captured by the one or more cameras; and

in accordance with a determination that the recording space available for recording media captured by the one or more cameras is below the first threshold amount of available space, the operation associated with changing an amount of recording space available for recording media captured by the one or more cameras includes cancelling an operation to increase the amount of recording space available for recording media captured by the one or more cameras.

3. The method of claim 1, wherein the operation associated with changing an amount of recording space available for recording media captured by the one or more cameras includes increasing the amount of recording space available for recording media captured by the one or more cameras.

4. The method of any one of claims 2-3, further comprising:

while increasing the amount of recording space available for recording media captured by the one or more cameras is in progress, displaying, via the display generation component, an indication of progress towards completion of increasing the amount of recording space available for recording media captured by the one or more cameras.

5. The method of any one of claims 2-4, further comprising:

while increasing the amount of recording space available for recording media captured by the one or more cameras is in progress, receiving, via the one or more input devices, a second input corresponding to selection of the recording space affordance; and

in response to receiving the second input, cancelling at least a portion of increasing the amount of recording space available for recording media captured by the one or more cameras.

6. The method of any one of claims 2-5, further comprising:

after increasing the amount of recording space available for recording media captured by the one or more cameras is in progress, receiving, via the one or more input devices, a request to capture media with the one or more cameras; and

in response to receiving the request to capture media with the one or more cameras, capturing first media.

7. The method of any one of claims 1-6, wherein the operation associated with changing an amount of recording space available for recording media captured by the one or more cameras includes cancelling an operation to increase the amount of recording space available for recording media captured by the one or more cameras.

8. The method of any one of claims 1-7, further comprising:

prior to receiving the input corresponding to selection of the recording space affordance, detecting a first event; and

in response to detecting the first event:

in accordance with a determination that a set of operation initiation criteria are met, wherein the set of operation initiation criteria includes a criterion that is met when the recording space available for recording media captured by the one or more cameras is less than a second threshold amount, initiating the operation to increase the amount of recording space available for recording media captured by the one or more cameras; and

in accordance with a determination that the set of operation initiation criteria are not met, forgoing initiating the operation to increase the amount of recording space available for recording media captured by the one or more cameras.

9. The method of claim 8, wherein the first event includes transitioning from a first media capture mode to a second media capture mode.

10. The method of any one of claims 1-9, wherein the operation associated with changing an amount of recording space available for recording media captured by the one or more cameras includes deleting at least some data that is not camera data.

11. The method of any one of claims 1-10, wherein the operation associated with changing an amount of recording space available for recording media captured by the one or more cameras includes deleting data that was previously captured by the one or more cameras and that meets a set of backup criteria.

12. The method of any one of claims 1-11, wherein displaying the camera user interface includes displaying, concurrently with the camera preview and the recording space affordance, an indication of an amount of time available to record and store, in the recording space, media captured by the one or more cameras.

13. The method of claim 12, wherein the indication of the amount of time available to record and store, in the recording space, media captured by the one or more cameras is based on a current media capture mode of the computer system.

14. The method of any one of claims 1-13, wherein:

in accordance with a determination that the amount of time available to record and store, in the recording space, media captured by the one or more cameras is a first value, the recording space has a first visual appearance; and

in accordance with a determination that the amount of time available to record and store, in the recording space, media captured by the one or more cameras is a second value, the recording space affordance has a second visual appearance, different from the first visual appearance.

15. The method of any one of claims 11-14, further comprising:

while a first amount of recording space is available for recording media captured by the one or more cameras and while the indication of the amount of time available to record and store, in the recording space, media captured by the one or more cameras indicates a first amount of time, determining that the amount of recording space available for recording media captured by the one or more cameras has increased to a second amount of recording space; and

in response to determining that the amount of recording space available for recording media captured by the one or more cameras has increased to the second amount of recording space, updating the indication of the amount of time available to record and store, in the recording space, media captured by the one or more cameras to indicate a second amount of time, greater than the first amount of time.

16. The method of any one of claims 11-15, further comprising:

while a third amount of recording space is available for recording media captured by the one or more cameras and while the indication of the amount of time available to record and store, in the recording space, media captured by the one or more cameras indicates a third amount of time, capturing first media via the one or more cameras and storing the first media in the recording space; and

in response to capturing the first media via the one or more cameras and storing the first media in the recording space, updating the indication of the amount of time available to record and store, in the recording space, media captured by the one or more cameras to indicate a fourth amount of time, less than the third amount of time.

17. The method of any one of claims 1-16, wherein the recording space affordance is displayed while capture of media via the one or more cameras is not occurring.

18. The method of any one of claims 1-16, wherein the recording space affordance is displayed while capture of media via the one or more cameras is occurring.

19. The method of claim 18, including, during ongoing capture of media with the one or more cameras of the device:

while the recording space affordance is not displayed, determining that the recording space available for recording media captured by the one or more cameras has fallen below a third threshold amount; and

in response to determining that the recording space available for recording media captured by the one or more cameras has fallen below the third threshold amount, displaying the recording space affordance.

20. The method of any one of claims 1-19, wherein the recording space affordance is overlaid on the camera preview.

21. The method of any one of claims 1-20, wherein displaying the camera user interface includes displaying, concurrently with the camera preview and the recording space affordance, a media capture affordance that, when selected, initiates capture of media via the one or more cameras.

22. The method of claim 21, further comprising:

receiving, via the one or more input devices, input corresponding to the media capture affordance; and

in response to receiving the input corresponding to the media capture affordance, initiating the capture of media via the one or more cameras.

23. The method of any one of claims 1-22, further comprising:

displaying, in the camera user interface, a media capture affordance:

in accordance with a determination that the recording space available for recording media captured by the one or more cameras is above a fourth threshold amount,

displaying the media capture affordance in a first visual state, wherein the media capture affordance is selectable while in the first visual state; and

in accordance with a determination that the recording space available for recording media captured by the one or more cameras is below the fourth threshold amount, displaying the media capture affordance in a second visual state, wherein the media capture affordance is not selectable while in the second visual state.

24. The method of claim 23, further comprising:

while the media capture affordance is displayed in the second visual state, determining that the amount of recording space available for recording media captured by the one or more cameras has increased above the fourth threshold amount; and

in response to determining that the amount of recording space available for recording media captured by the one or more cameras has increased above the fourth threshold amount, updating the media capture affordance from the second visual state to the first visual state.

25. The method of any one of claims 22-24, further comprising:

while the media capture affordance is displayed in the second visual state, detecting a request to modify one or more media capture settings; and

in response to detecting the request to modify the one or more media capture settings:

modifying the one or more media settings, wherein modifying the one or more media settings reduces the bitrate of captured media; and

updating the media capture affordance from the second visual state to the first visual state.

26. The method of any one of claims 1-25, wherein displaying the camera user interface includes displaying, concurrently with the camera preview and the recording space affordance, a set of one or more media capture setting affordances.

27. The method of claim 26, wherein the set of one or more media capture setting affordances includes a first media capture setting affordance that, when selected, changes the media capture bitrate.

28. The method of claim 26, wherein the set of one or more media capture setting affordances includes two or more different media capture setting affordances independently

selected from the group consisting of: a media capture setting affordance that modifies a media codec setting, a media capture setting affordance that modifies a frame rate setting, and a media capture setting affordance that modifies a pixel density setting.

29. The method of any one of claims 1-28, further comprising:

while the computer system is in a third media capture mode and while the recording space affordance is not displayed, detecting a request to transition to a fourth media capture mode; and

in response to the request to transition to the fourth media capture mode:

transitioning to the fourth media capture mode; and

displaying the recording space affordance.

30. The method of any one of claims 1-29, further comprising:

displaying a second camera user interface, wherein displaying the second camera user interface includes:

in accordance with a determination that the recording space available for recording media captured by the one or more cameras is below a fifth threshold amount, displaying the camera preview concurrently with the recording space affordance; and

in accordance with a determination that the recording space available for recording media captured by the one or more cameras is above the fifth threshold amount, displaying the camera preview without the recording space affordance.

31. The method of claim 30, wherein displaying the camera preview without the recording space affordance includes displaying, concurrently with the camera preview, a second indication of an amount of time available to record and store, in the recording space, media captured by the one or more cameras.

32. The method of any one of claims 29-31, wherein the recording space affordance, when displayed in the second camera user interface, is displayed at a first location in the second camera user interface, the method further comprising:

while displaying the second camera user interface, receiving, via the one or more input devices an input corresponding to the first location; and

in response to receiving the input corresponding to the first location:

in accordance with a determination that the recording space affordance is currently displayed in the second camera user interface, performing the operation associated with changing an amount of recording space available for recording media captured by the one or more cameras; and

in accordance with a determination that the recording space affordance is not currently displayed in the second camera user interface, performing a camera operation that does not include performing the operation associated with changing an amount of recording space available for recording media captured by the one or more cameras.

33. The method of any one of claims 1-32, wherein the recording space affordance is displayed concurrently with an indication of an additional amount of time available to record and store, in the recording space, media captured by the one or more cameras that would be made available by performing the operation associated with changing an amount of recording space available for recording media captured by the one or more cameras.

34. A non-transitory computer-readable storage medium storing one or more programs configured to be executed by one or more processors of a computer system having one or more cameras and that is in communication with a display generation component and one or more input devices, the one or more programs including instructions for performing the method of any of claims 1-33.

35. A computer system having one or more cameras and that is configured to communicate with a display generation component and one or more input devices, the computer system comprising:

one or more processors; and

memory storing one or more programs configured to be executed by the one or more processors, the one or more programs including instructions for performing the method of any of claims 1-33.

36. A computer system having one or more cameras and that is configured to communicate with a display generation component and one or more input devices, comprising:

means for performing the method of any of claims 1-33.

37. A computer program product, comprising one or more programs configured to be executed by one or more processors of a computer system having one or more cameras and that is configured to communicate with a display generation component and one or more input devices, the one or more programs including instructions for performing the method of any of claims 1-33.

38. A non-transitory computer-readable storage medium storing one or more programs configured to be executed by one or more processors of a computer system having one or more cameras and that is in communication with a display generation component and one or more input devices, the one or more programs including instructions for:

displaying, via the display generation component, a camera user interface, wherein displaying the camera user interface includes concurrently displaying:

a camera preview that includes a representation of one or more objects in a field-of-view of a first camera of the one or more cameras; and

a recording space affordance that, when selected, initiates performing an operation associated with recording space available for recording media captured by the one or more cameras;

receiving, via the one or more input devices, input corresponding to selection of the recording space affordance; and

in response to receiving the input corresponding to selection of the recording space affordance, performing the operation associated with changing an amount of recording space available for recording media captured by the one or more cameras.

39. A computer system having one or more cameras and that is configured to communicate with a display generation component and one or more input devices, comprising:

one or more processors; and

memory storing one or more programs configured to be executed by the one or more processors, the one or more programs including instructions for:

displaying, via the display generation component, a camera user interface, wherein displaying the camera user interface includes concurrently displaying:

a camera preview that includes a representation of one or more objects in a field-of-view of a first camera of the one or more cameras; and

a recording space affordance that, when selected, initiates performing an operation associated with recording space available for recording media captured by the one or more cameras;

receiving, via the one or more input devices, input corresponding to selection of the recording space affordance; and

in response to receiving the input corresponding to selection of the recording space affordance, performing the operation associated with changing an amount of recording space available for recording media captured by the one or more cameras.

40. A computer system having one or more cameras and that is configured to communicate with a display generation component and one or more input devices, comprising:

means for displaying, via the display generation component, a camera user interface, wherein displaying the camera user interface includes concurrently displaying:

a camera preview that includes a representation of one or more objects in a field-of-view of a first camera of the one or more cameras; and

a recording space affordance that, when selected, initiates performing an operation associated with recording space available for recording media captured by the one or more cameras;

means for receiving, via the one or more input devices, input corresponding to selection of the recording space affordance; and

means for, in response to receiving the input corresponding to selection of the recording space affordance, performing the operation associated with changing an amount of recording space available for recording media captured by the one or more cameras.

41. A computer program product, comprising one or more programs configured to be executed by one or more processors of a computer system having one or more cameras and that is in communication with a display generation component and one or more input devices, the one or more programs including instructions for:

displaying, via the display generation component, a camera user interface, wherein displaying the camera user interface includes concurrently displaying:

a camera preview that includes a representation of one or more objects in a field-of-view of a first camera of the one or more cameras; and

a recording space affordance that, when selected, initiates performing an operation associated with recording space available for recording media captured by the one or more cameras;

receiving, via the one or more input devices, input corresponding to selection of the recording space affordance; and

in response to receiving the input corresponding to selection of the recording space affordance, performing the operation associated with changing an amount of recording space available for recording media captured by the one or more cameras.

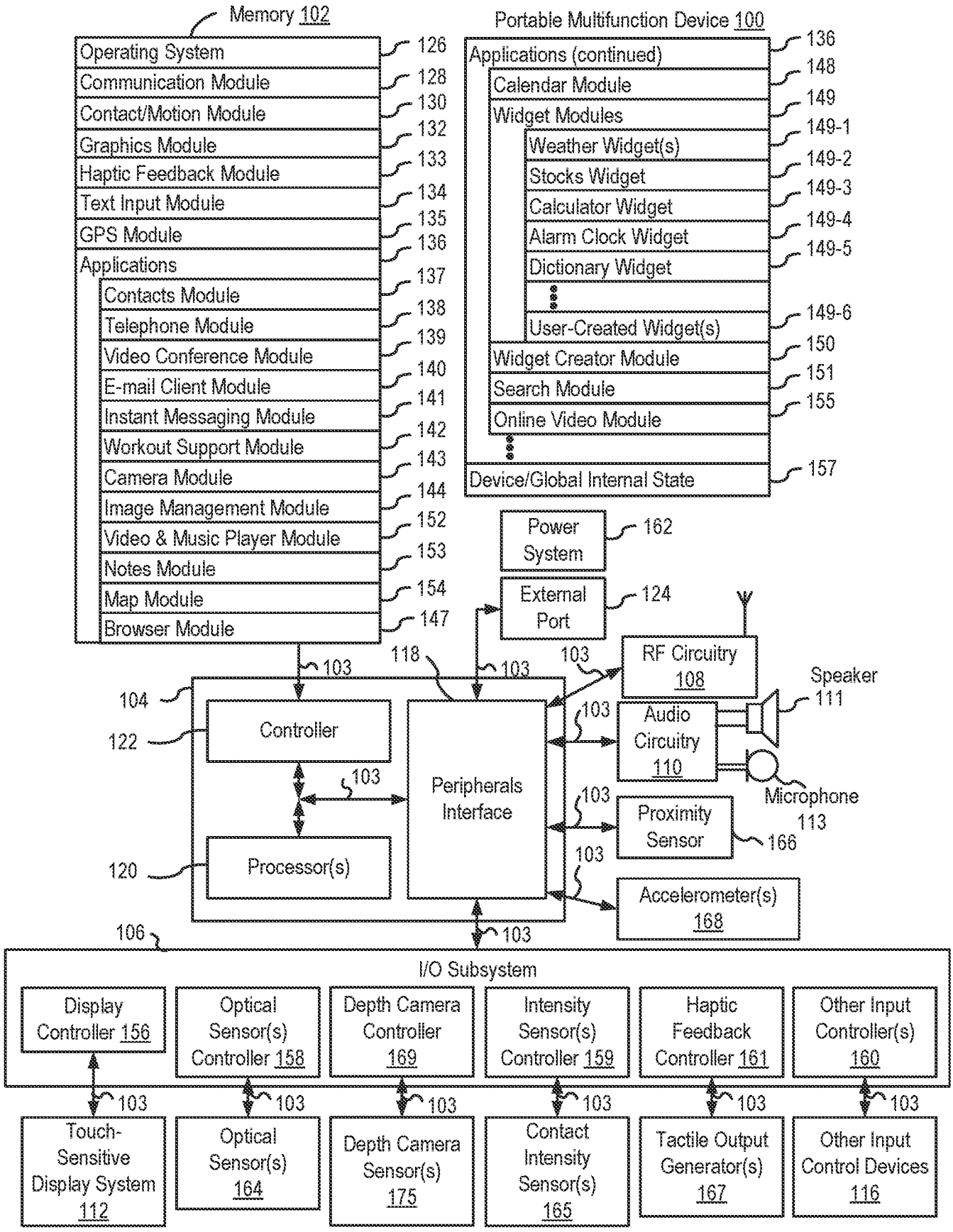
Memory 102
Operating System
Communication Module
Contact/Motion Module
Graphics Module
Haptic Feedback Module
Text Input Module
GPS Module
Applications
Contacts Module
Telephone Module
Video Conference Module
E-mail Client Module
Instant Messaging Module
Workout Support Module
Camera Module
Image Management Module
Video & Music Player Module
Notes Module
Map Module
Browser Module
126
128
130
132
133
134
135
136
137
138
139
140
141
142
143
144
152
153
154
147
Portable Multifunction Device 100
Applications (continued)
Calendar Module
Widget Modules
Weather Widget(s)
Stocks Widget
Calculator Widget
Alarm Clock Widget
Dictionary Widget
User-Created Widget(s)
Widget Creator Module
Search Module
Online Video Module
Device/Global Internal State
136
148
149
149-1
149-2
149-3
149-4
149-5
149-6
150
151
155
157
Power System
162
External Port
124
RF Circuitry 108
Speaker 111
Audio Circuitry 110
Microphone 113
Proximity Sensor
166
Accelerometer(s) 168
Controller
Peripherals Interface
Processor(s)
104
122
120
103
118
106
I/O Subsystem
Display Controller 156
Optical Sensor(s) Controller 158
Depth Camera Controller 169
Intensity Sensor(s) Controller 159
Haptic Feedback Controller 161
Other Input Controller(s) 160
Touch-Sensitive Display System 112
Optical Sensor(s) 164
Depth Camera Sensor(s) 175
Contact Intensity Sensor(s) 165
Tactile Output Generator(s) 167
Other Input Control Devices 116

FIG. 1A

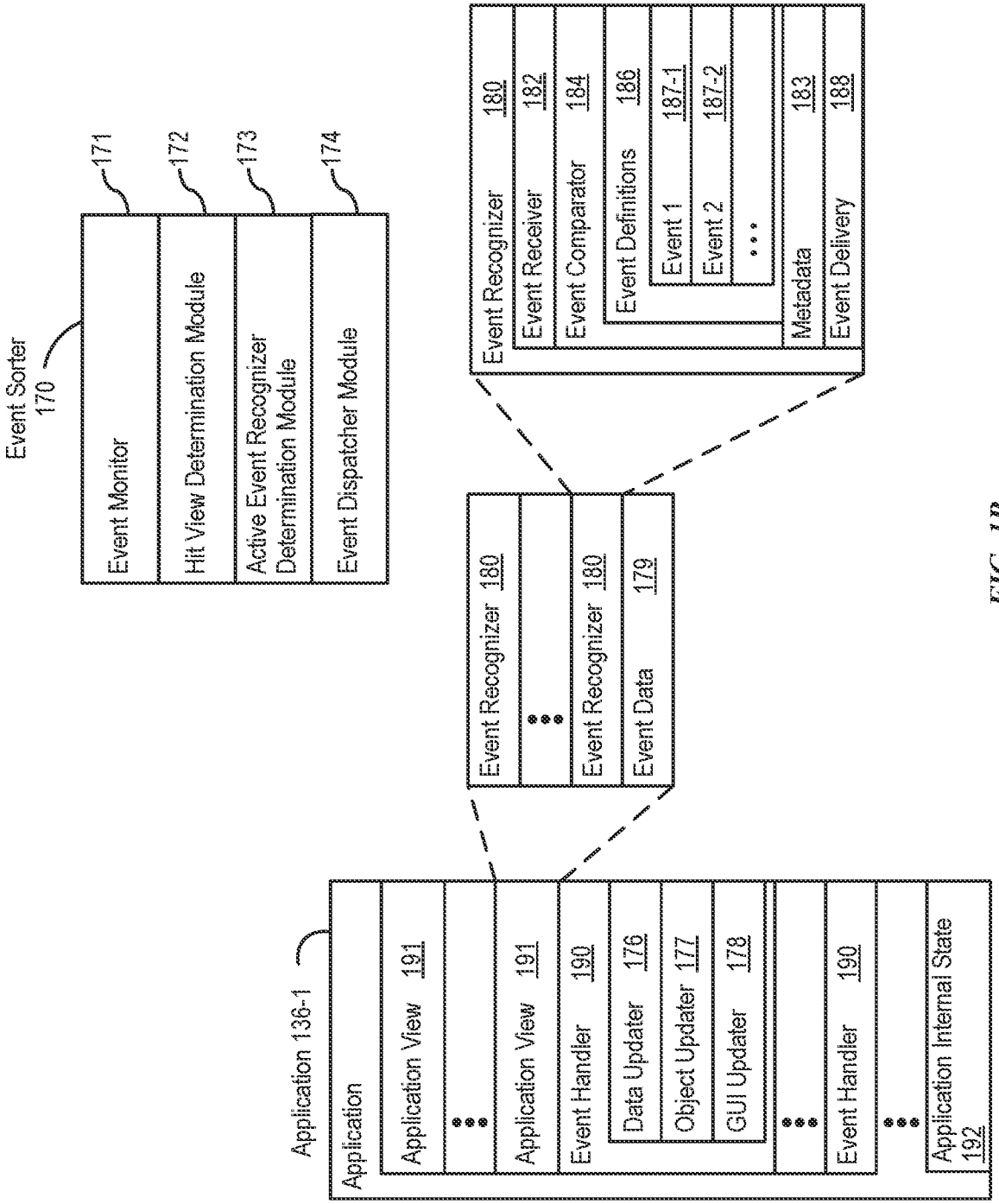
Event Sorter 170
Event Monitor
171
Hit View Determination Module
172
Active Event Recognizer Determination Module
173
Event Dispatcher Module
174
Event Recognizer 180
Event Receiver 182
Event Comparator 184
Event Definitions 186
Event 1 187-1
Event 2 187-2
Metadata 183
Event Delivery 188
Application 136-1
Application
Application View 191
Application View 191
Event Handler 190
Data Updater 176
Object Updater 177
GUI Updater 178
Event Handler 190
Application Internal State 192
Event Recognizer 180
Event Recognizer 180
Event Data 179

FIG. 1B

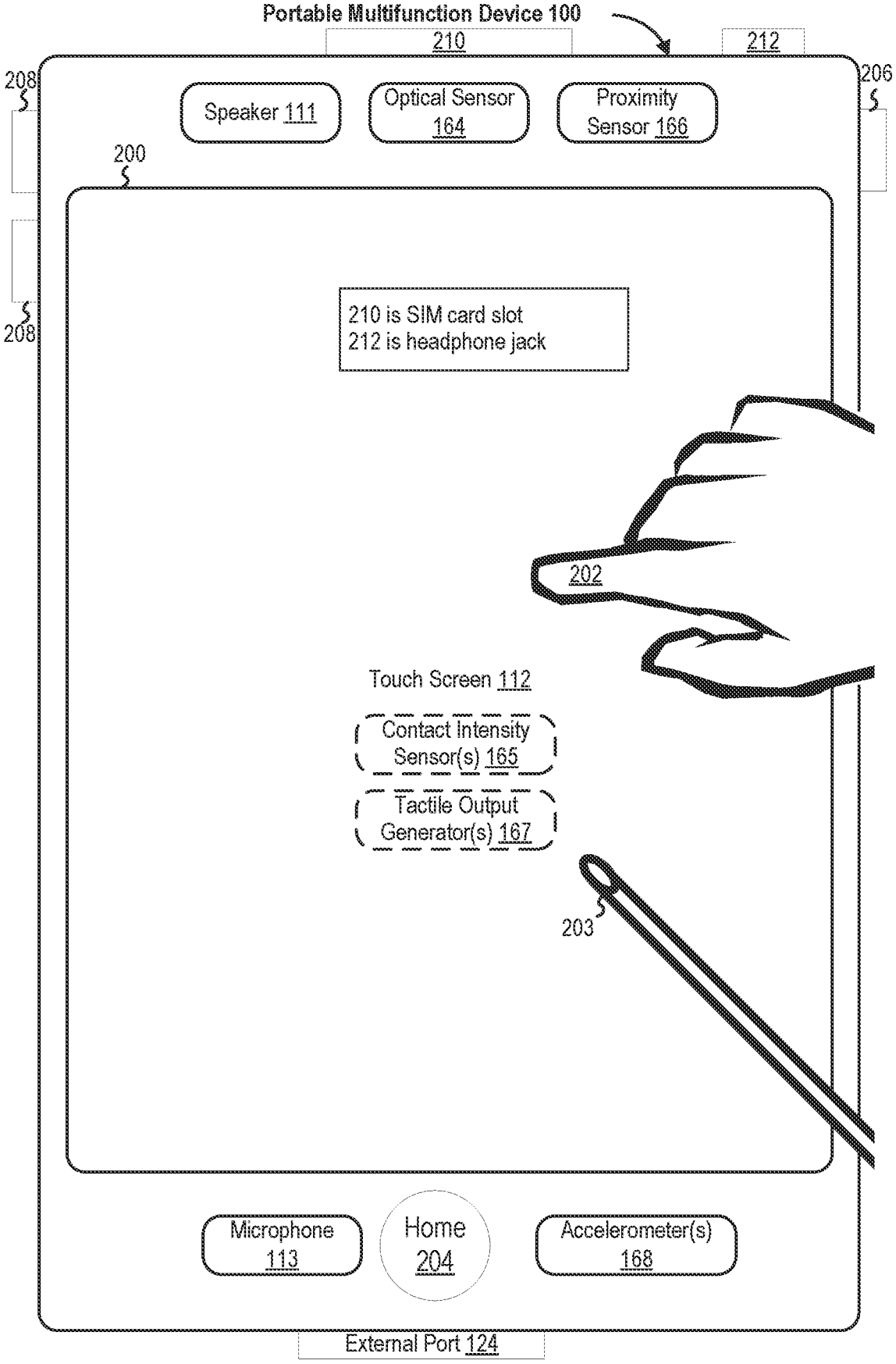
Portable Multifunction Device 100
210
212
208
206
Speaker 111
Optical Sensor 164
Proximity Sensor 166
200
208
210 is SIM card slot
212 is headphone jack
202
Touch Screen 112
Contact Intensity Sensor(s) 165
Tactile Output Generator(s) 167
203
Microphone 113
Home 204
Accelerometer(s) 168
External Port 124

FIG. 2

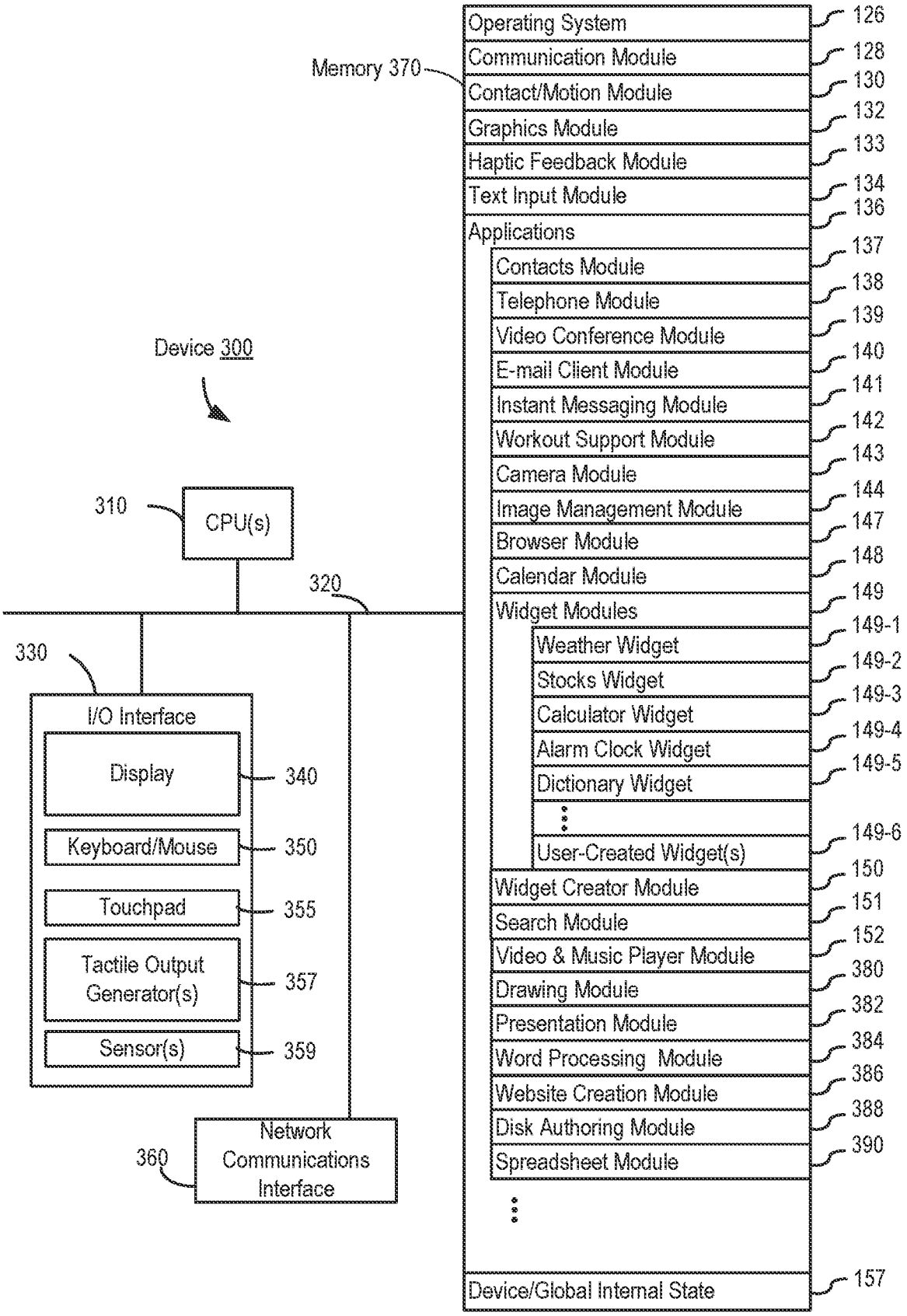
Device 300
310
CPU(s)
320
330
I/O Interface
Display
340
Keyboard/Mouse
350
Touchpad
355
Tactile Output Generator(s)
357
Sensor(s)
359
360
Network Communications Interface
Memory 370
Operating System
126
Communication Module
128
Contact/Motion Module
130
Graphics Module
132
Haptic Feedback Module
133
Text Input Module
134
Applications
136
Contacts Module
137
Telephone Module
138
Video Conference Module
139
E-mail Client Module
140
Instant Messaging Module
141
Workout Support Module
142
Camera Module
143
Image Management Module
144
Browser Module
147
Calendar Module
148
Widget Modules
149
Weather Widget
149-1
Stocks Widget
149-2
Calculator Widget
149-3
Alarm Clock Widget
149-4
Dictionary Widget
149-5
User-Created Widget(s)
149-6
Widget Creator Module
150
Search Module
151
Video & Music Player Module
152
Drawing Module
380
Presentation Module
382
Word Processing Module
384
Website Creation Module
386
Disk Authoring Module
388
Spreadsheet Module
390
Device/Global Internal State
157

FIG. 3

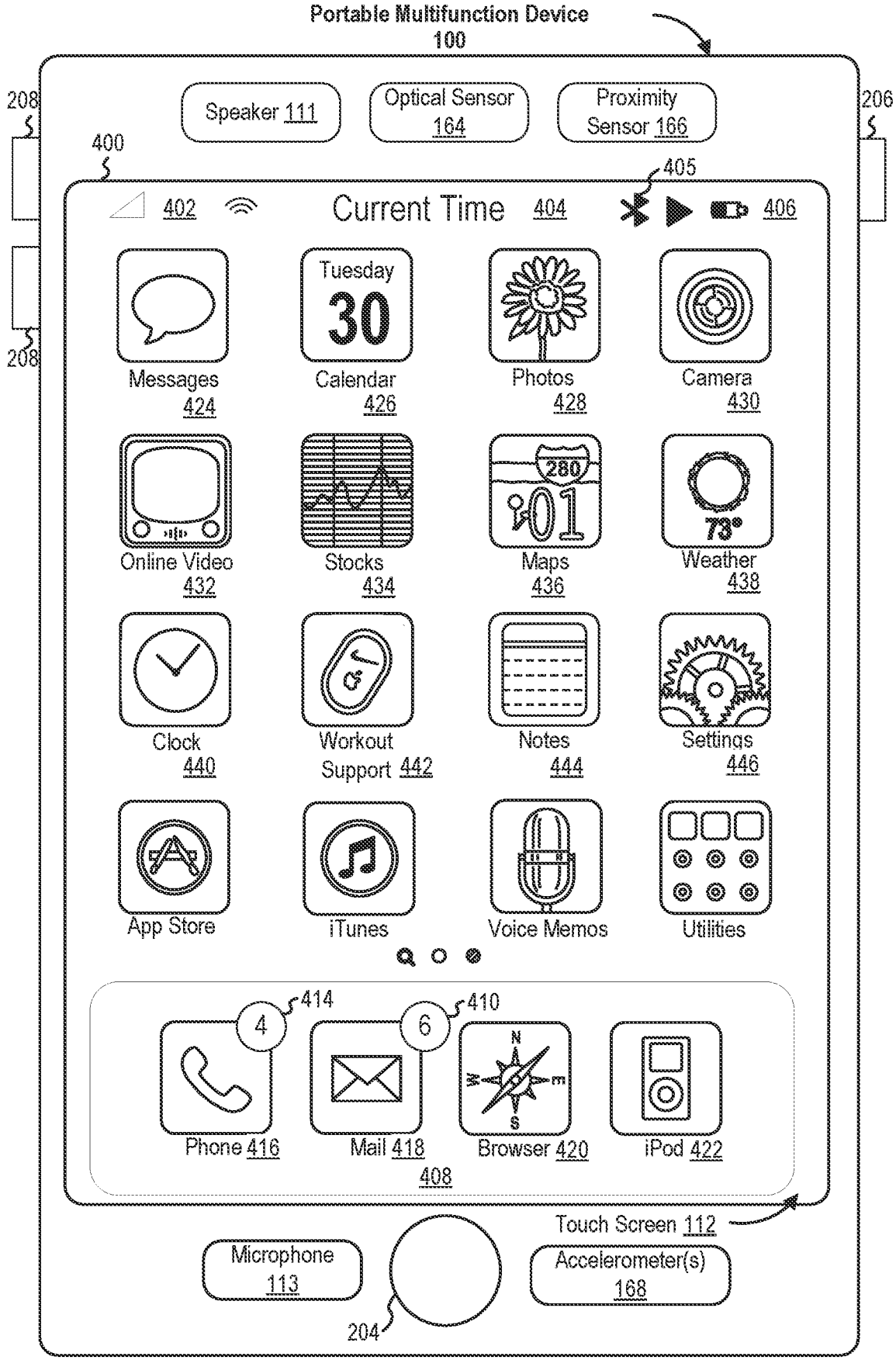
Portable Multifunction Device
100
208
206
Speaker 111
Optical Sensor
164
Proximity
Sensor 166
400
405
402
Current Time 404
406
Messages
424
Tuesday
30
Calendar
426
Photos
428
Camera
430
Online Video
432
Stocks
434
280
101
Maps
436
73°
Weather
438
Clock
440
Workout
Support 442
Notes
444
Settings
446
App Store
iTunes
Voice Memos
Utilities
414
410
4
6
N
W
E
S
Phone 416
Mail 418
Browser 420
iPod 422
408
Touch Screen 112
Microphone
113
Accelerometer(s)
168
204

FIG. 4A

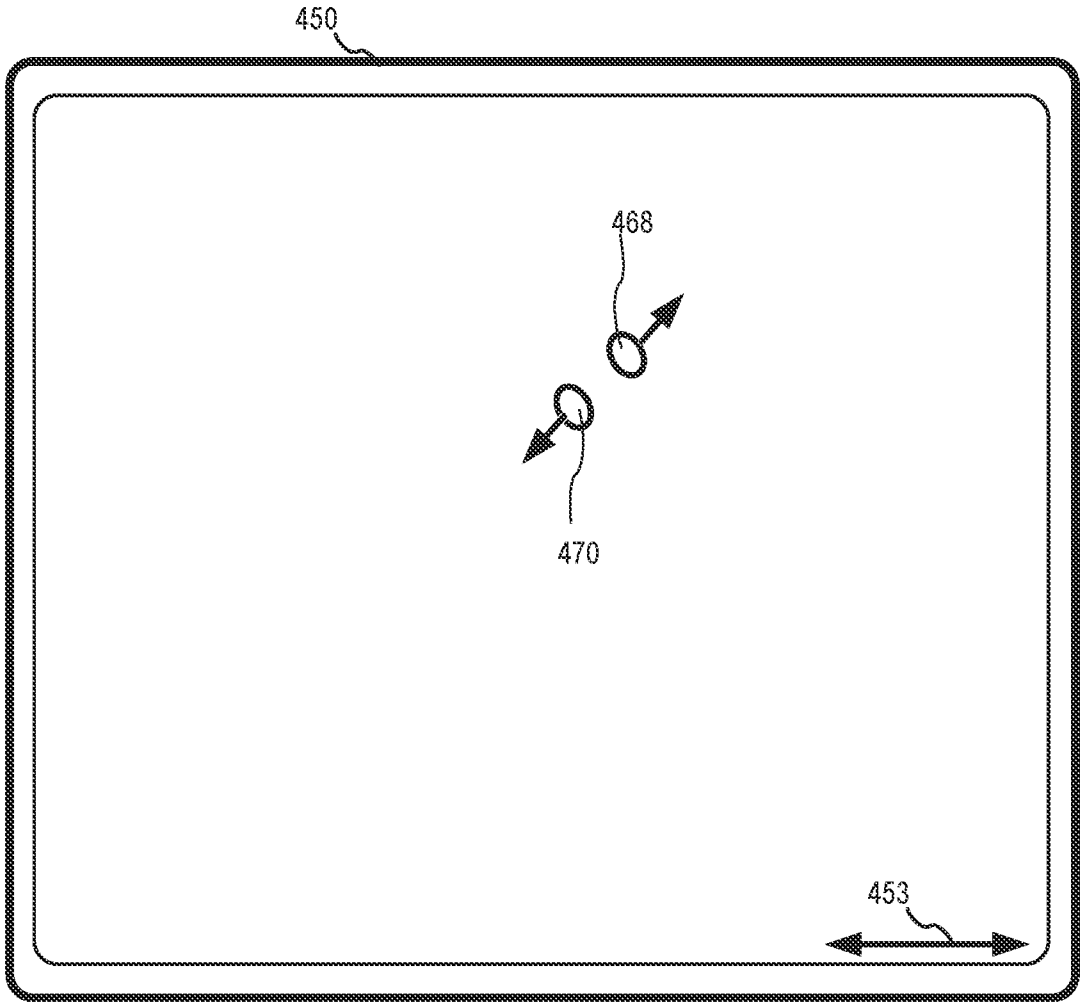
450
468
470
453

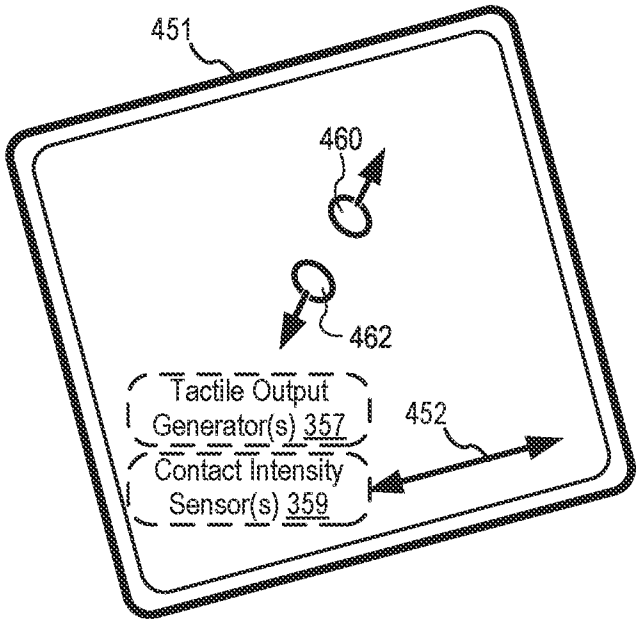
451
460
462
Tactile Output Generator(s) 357
Contact Intensity Sensor(s) 359
452

FIG. 4B

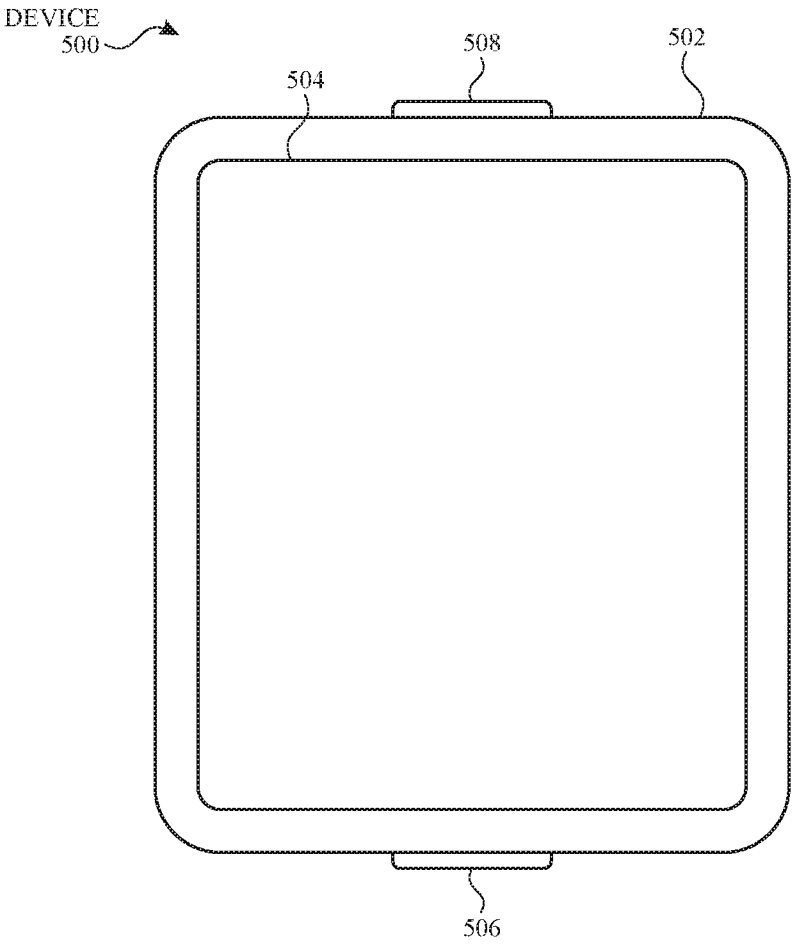

FIG. 5A

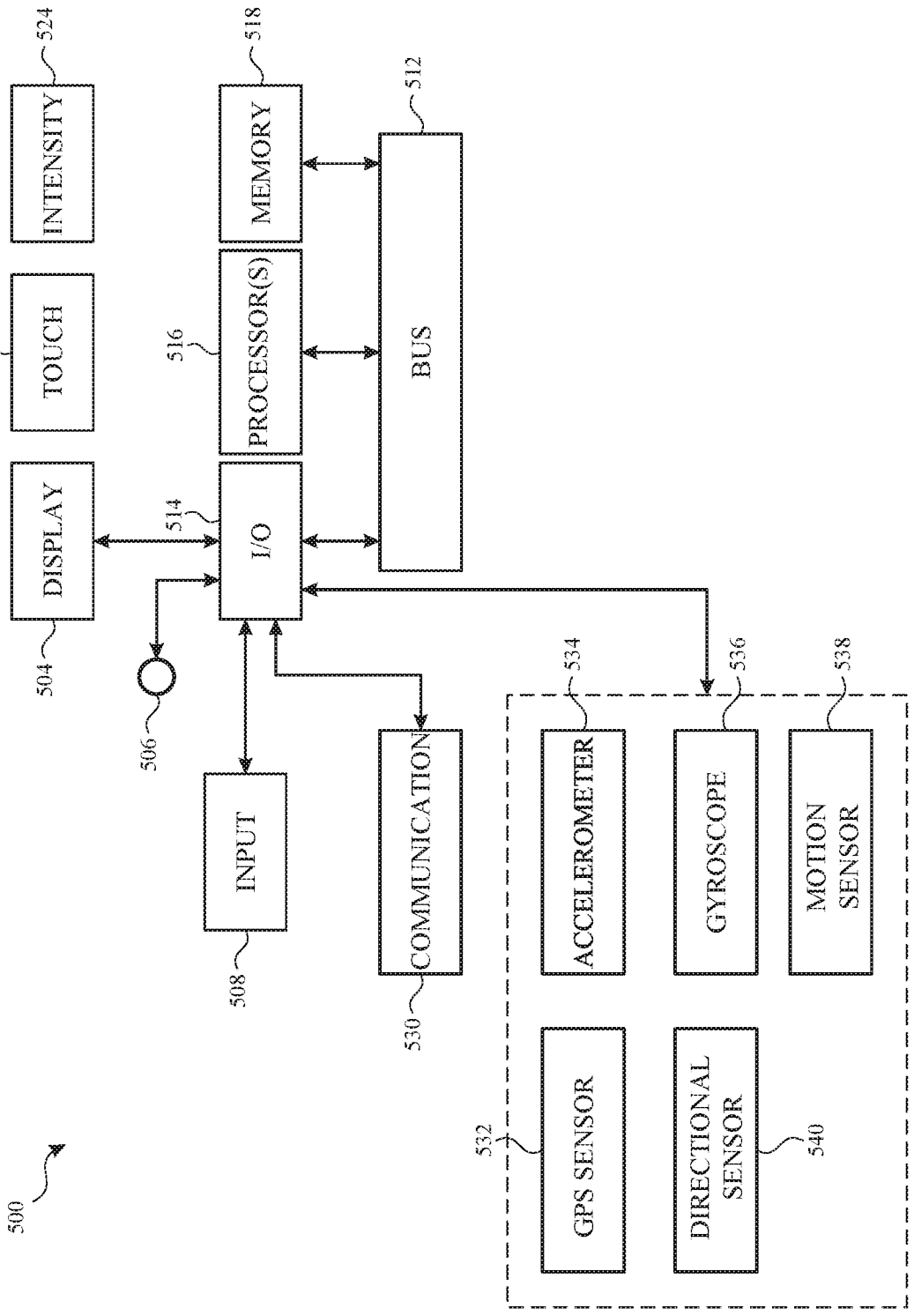
500
DISPLAY
504
TOUCH
522
INTENSITY
524
506
I/O
514
PROCESSOR(S)
516
MEMORY
518
BUS
512
INPUT
508
COMMUNICATION
530
ACCELEROMETER
534
GYROSCOPE
536
MOTION SENSOR
538
GPS SENSOR
532
DIRECTIONAL SENSOR
540

FIG. 5B

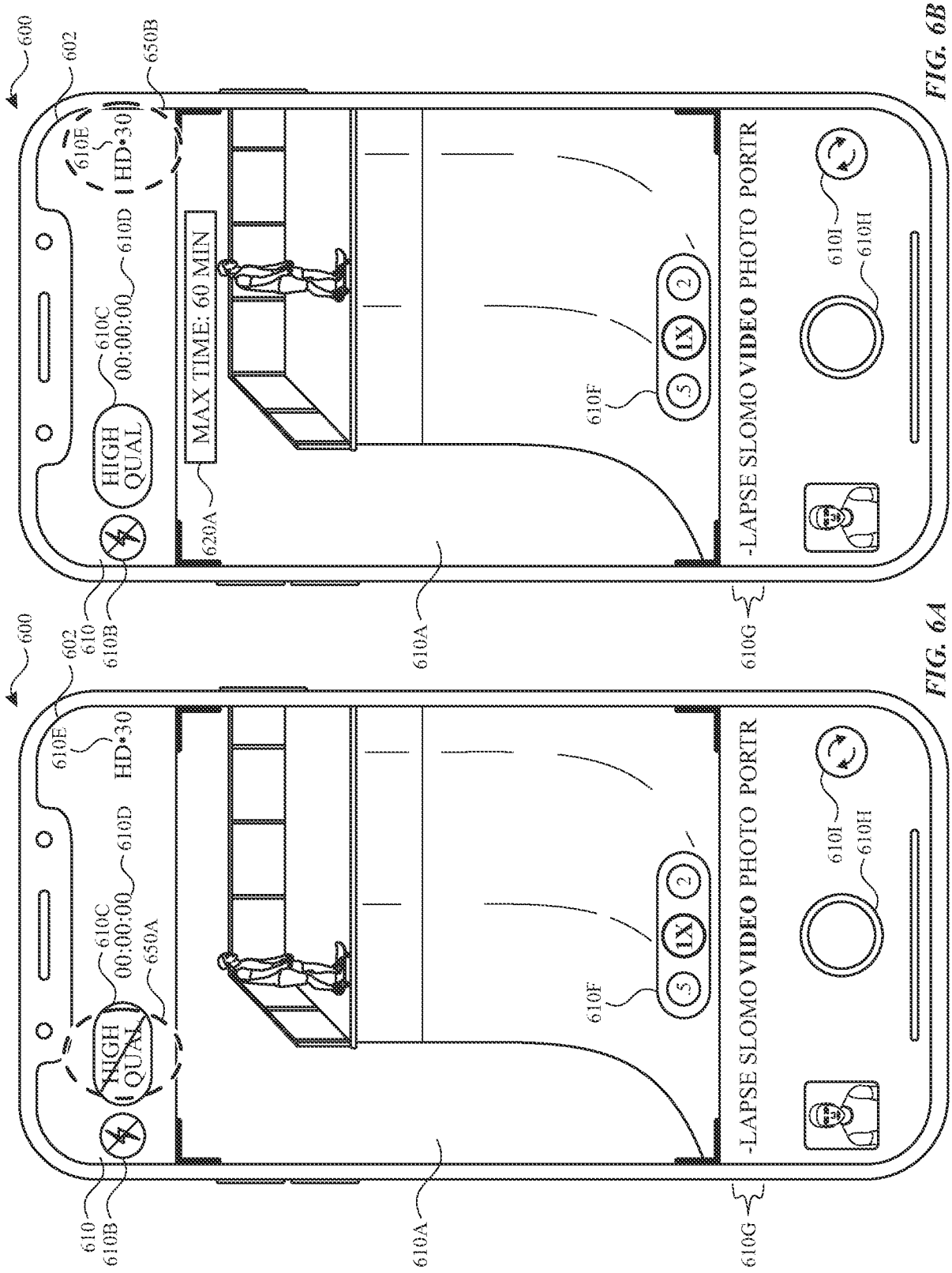
600
602
610
610B
610A
610G
610E
HD•30
610D
00:00:00
610C
650A
HIGH QUAL
610F
5
1X
2
610I
610H
-LAPSE SLOMO VIDEO PHOTO PORTR
600
602
650B
610E
HD•30
610D
00:00:00
610C
HIGH QUAL
MAX TIME: 60 MIN
620A
610F
5
1X
2
610I
610H
-LAPSE SLOMO VIDEO PHOTO PORTR
610
610B
610A
610G

FIG. 6A

FIG. 6B

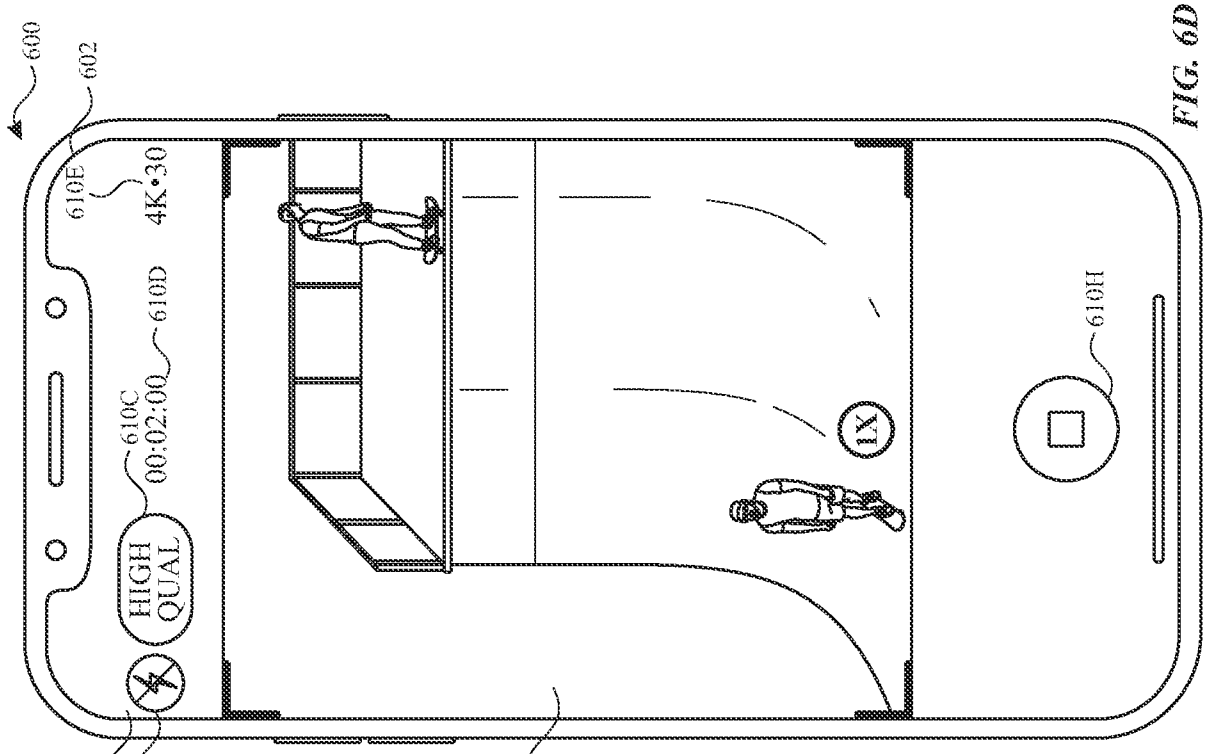
600
602
610E
4K•30
610D
610C
00:02:00
HIGH QUAL
610
610B
610A
1X
610H

FIG. 6D

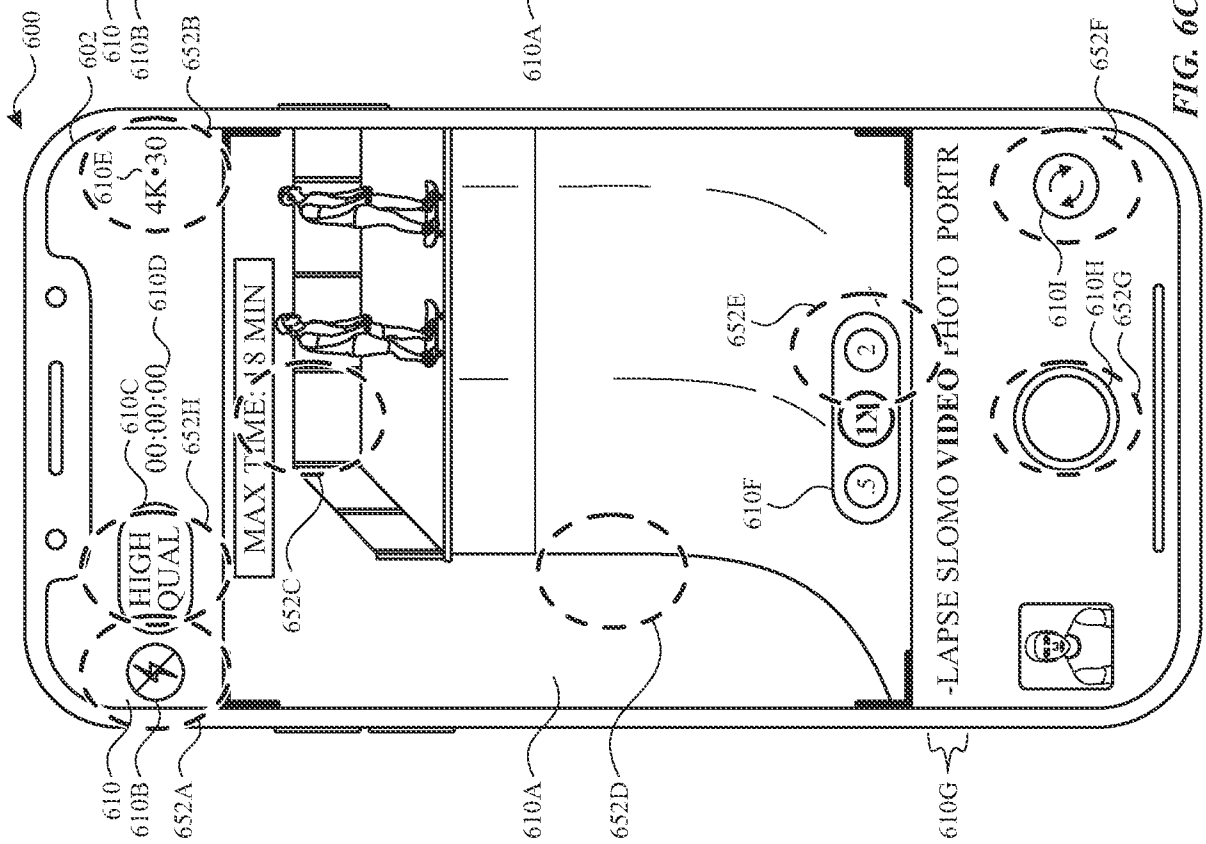
600
602
610
610B
652B
610E
4K•30
610D
610C
00:00:00
652H
HIGH QUAL
MAX TIME: 8 MIN
652C
652E
610F
3
1X
2
652F
610I
610H
652G
-LAPSE SLOMO VIDEO PHOTO PORTR
610
610B
652A
610A
652D
610G

FIG. 6C

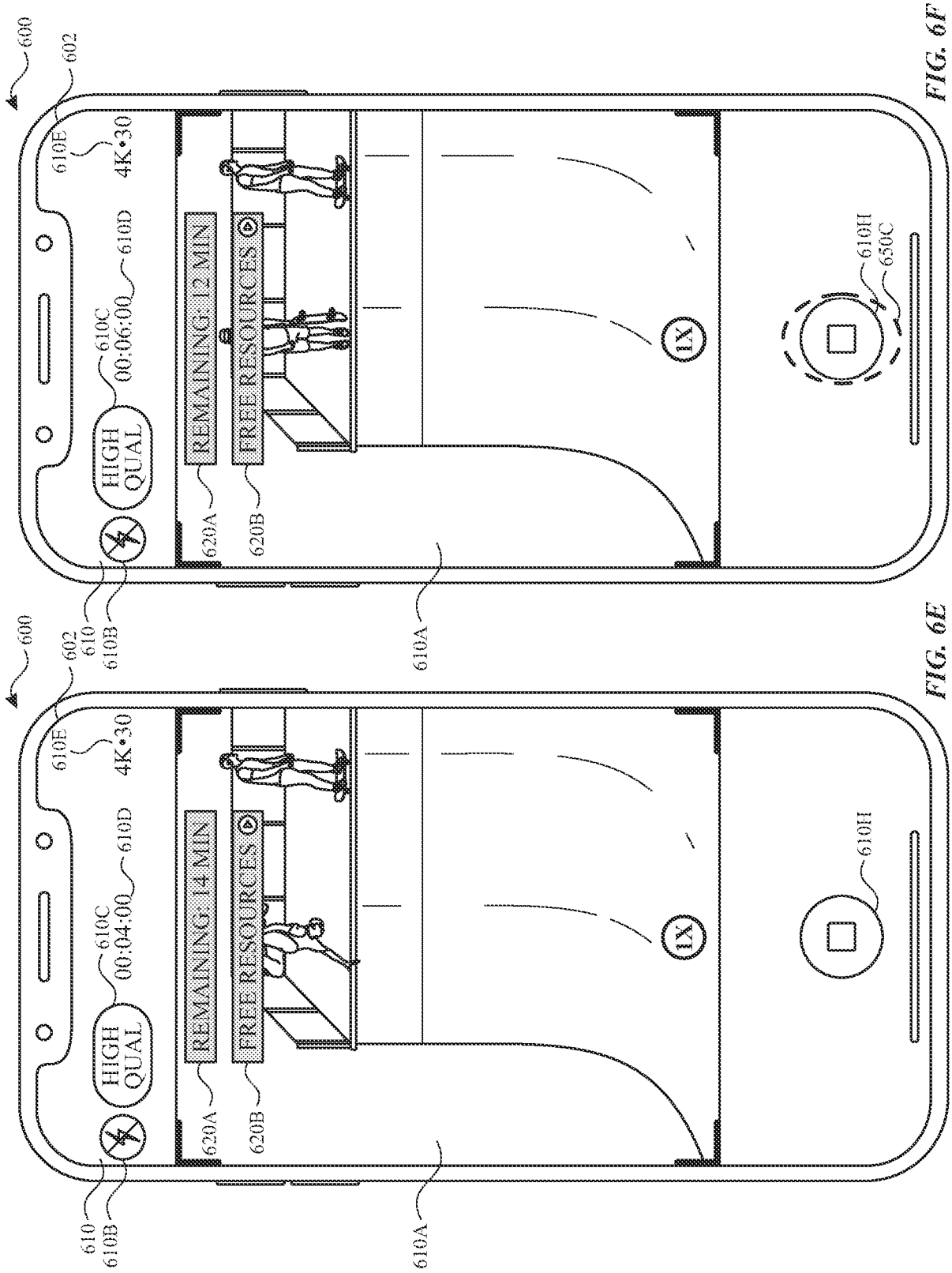
600
602
610E
4K•30
610D
610C
00:04:00
HIGH QUAL
REMAINING 14 MIN
FREE RESOURCES
620A
620B
610
610B
610A
1X
610H

FIG. 6E

600
602
610E
4K•30
610D
610C
00:06:00
HIGH QUAL
REMAINING 12 MIN
FREE RESOURCES
620A
620B
610
610B
610A
1X
610H
650C

FIG. 6F

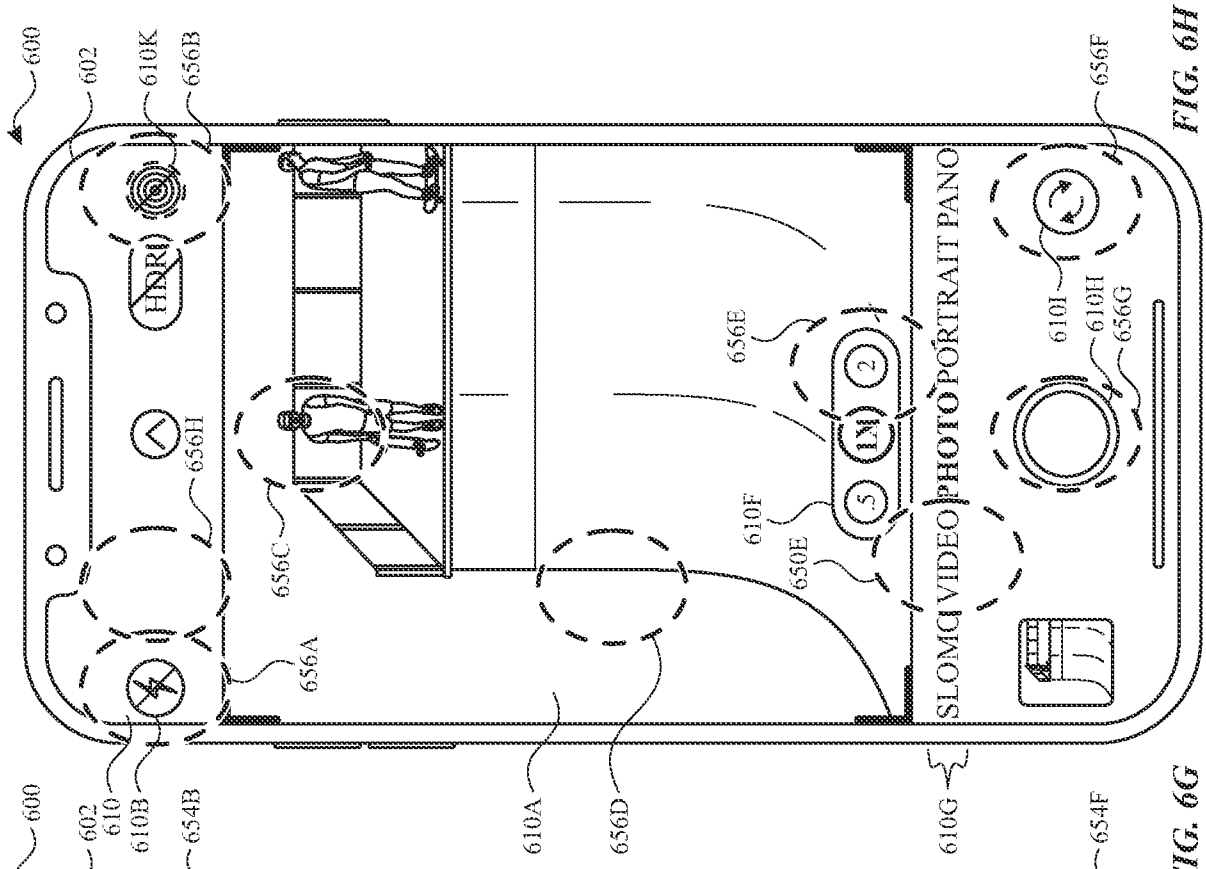
600
602
610K
656B
HDR
656H
656C
656A
656E
610F
650E
SLOMO VIDEO PHOTO PORTRAIT PANO
656F
610I
610H
656G
610
610B
610A
656D
610G

FIG. 6H

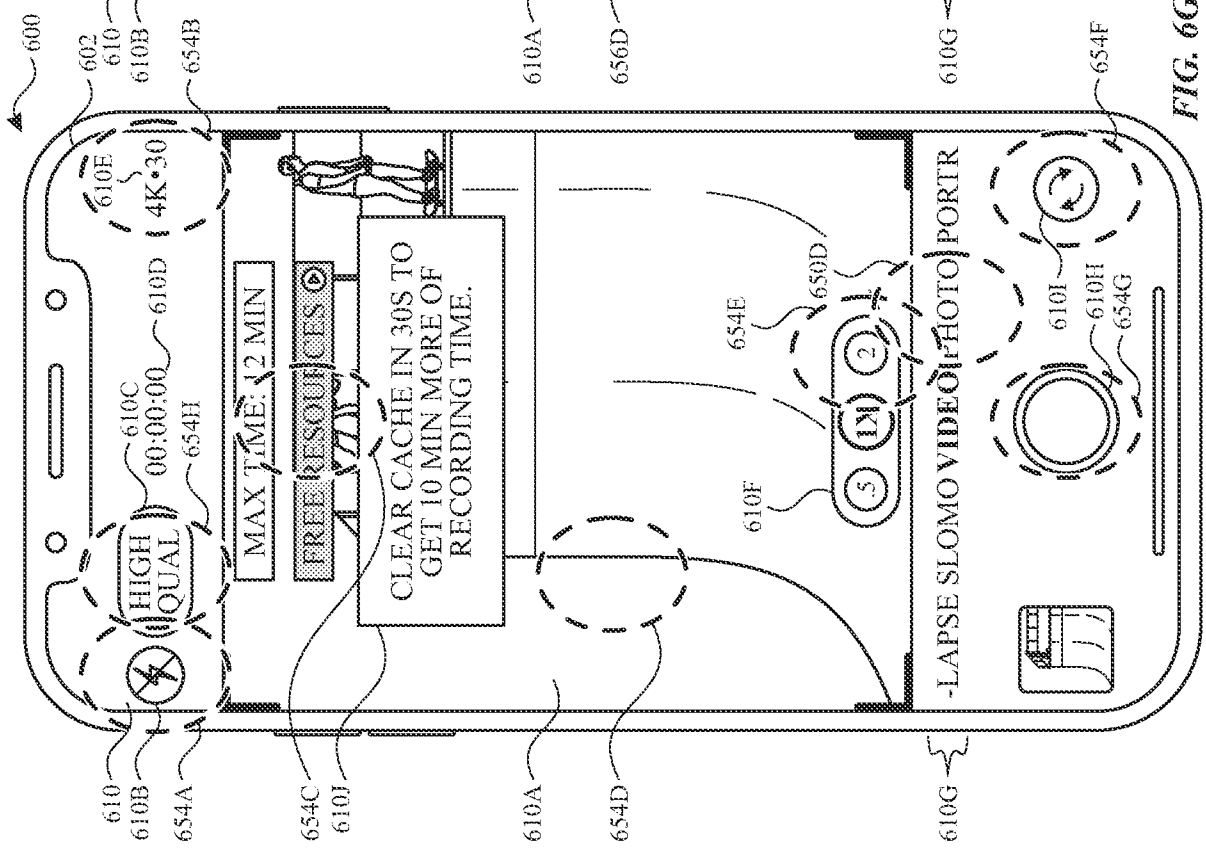
600
602
654B
610E
4K•30
610D
610C
00:00:00
654H
HIGH QUAL
MAX TIME: 12 MIN
FREE RESOURCES
CLEAR CACHE IN 30S TO GET 10 MIN MORE OF RECORDING TIME.
654E
650D
610F
-LAPSE SLOMO VIDEO PHOTO PORTR
654F
610I
610H
654G
610
610B
654A
654C
610J
610A
654D
610G

FIG. 6G

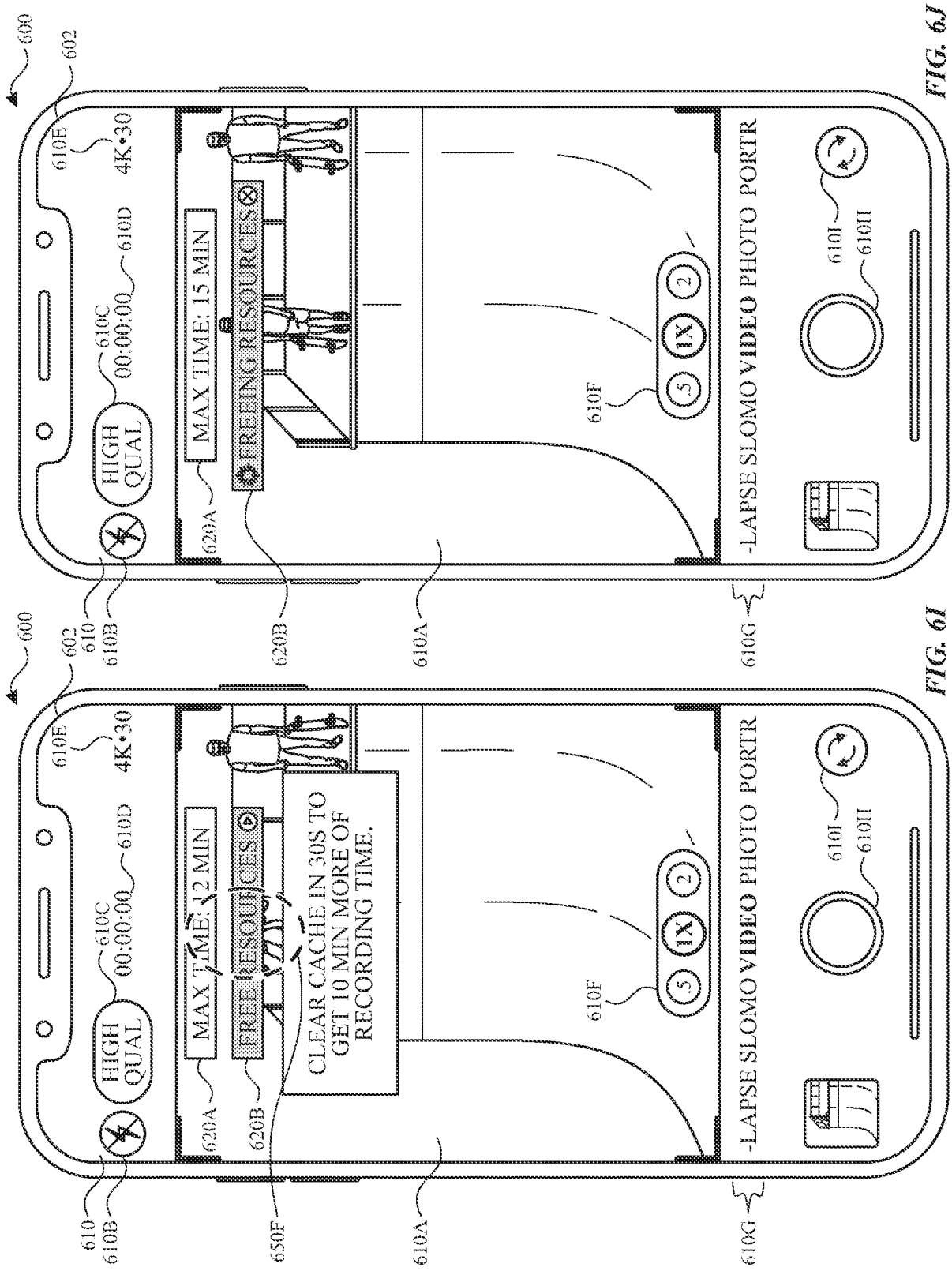
600
602
610E
4K•30
610D
610C
00:00:00
HIGH QUAL
610B
610
620A
MAX TIME: 15 MIN
620B
FREEING RESOURCES
610A
610F
5
1X
2
-LAPSE SLOMO VIDEO PHOTO PORTR
610G
610I
610H
650F
CLEAR CACHE IN 30S TO GET 10 MIN MORE OF RECORDING TIME.

FIG. 6J

FIG. 6I

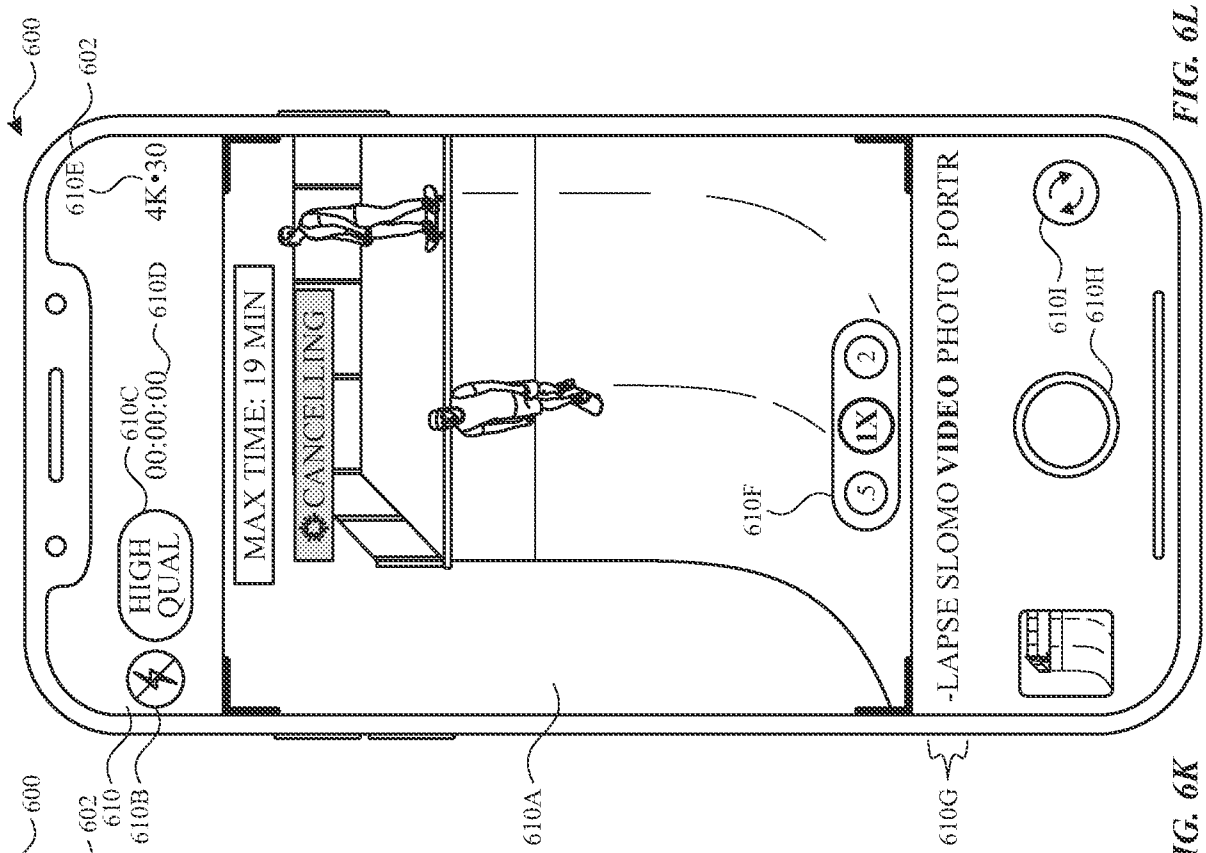
600
602
610E
4K•30
610D
610C
00:00:00
HIGH QUAL
MAX TIME: 19 MIN
CANCELLING
610F
5
1X
2
-LAPSE SLOMO VIDEO PHOTO PORTR
610I
610H
610
610B
610A
610G

FIG. 6L

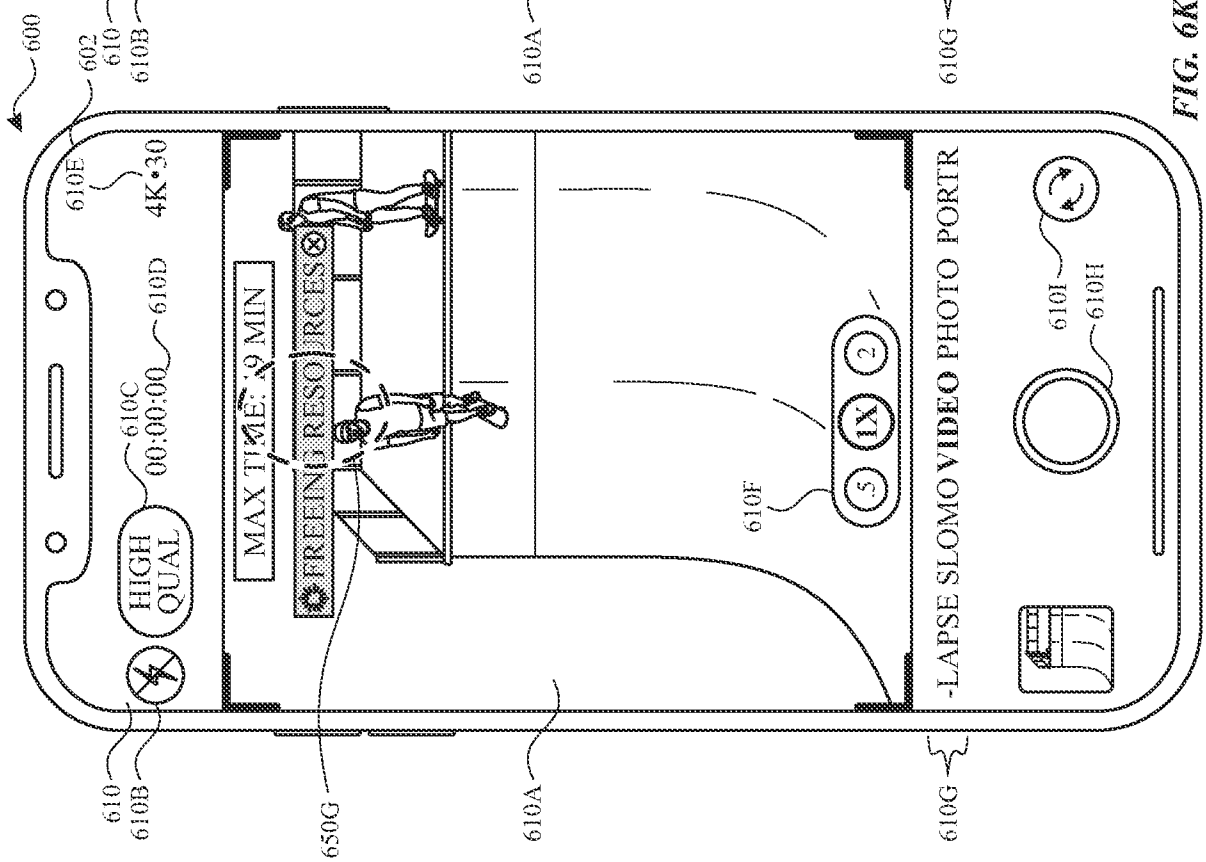
600
602
610E
4K•30
610D
610C
00:00:00
HIGH QUAL
MAX TIME: 19 MIN
FREEING RESOURCES
610F
5
1X
2
-LAPSE SLOMO VIDEO PHOTO PORTR
610I
610H
610
610B
650G
610A
610G

FIG. 6K

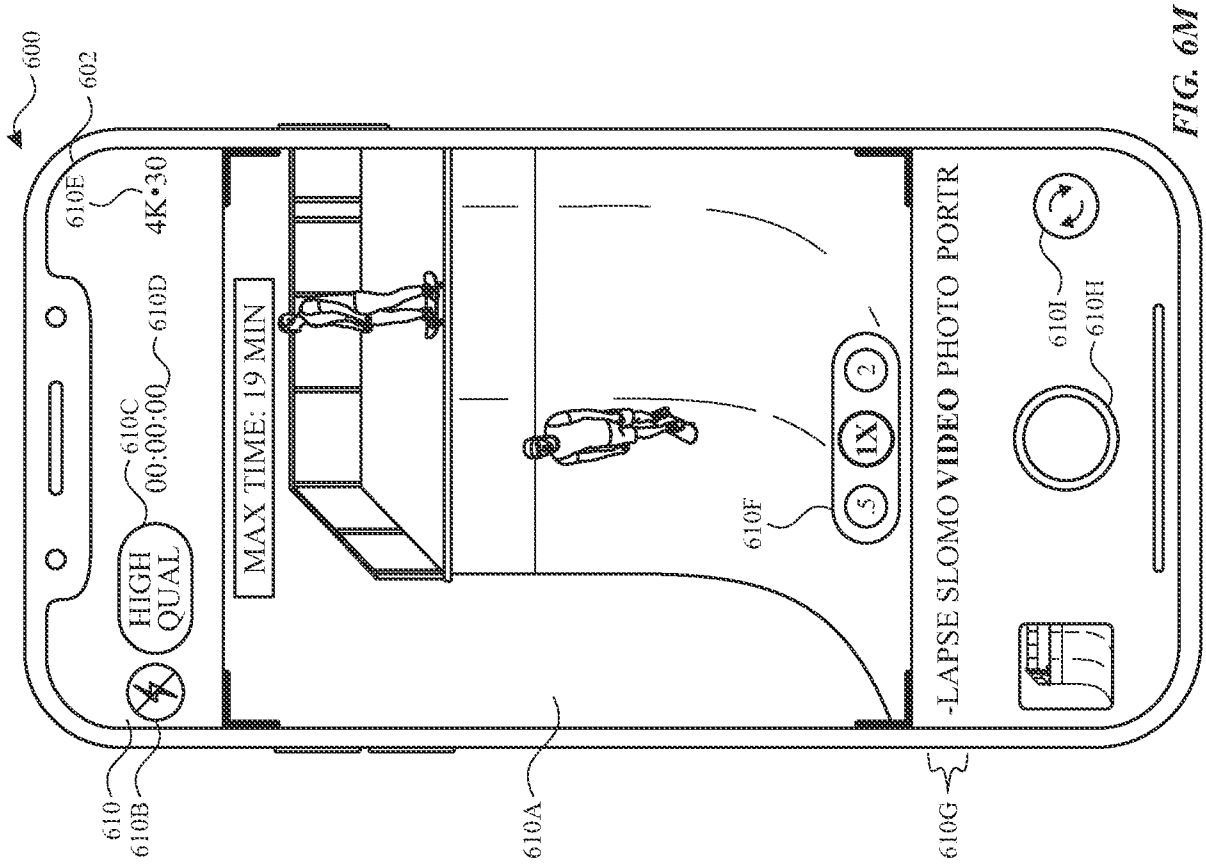
600
602
610E
4K•30
610D
610C
00:00:00
HIGH QUAL
MAX TIME: 19 MIN
610F
1X
-LAPSE SLOMO VIDEO PHOTO PORTR
610I
610H
610
610B
610A
610G

FIG. 6M

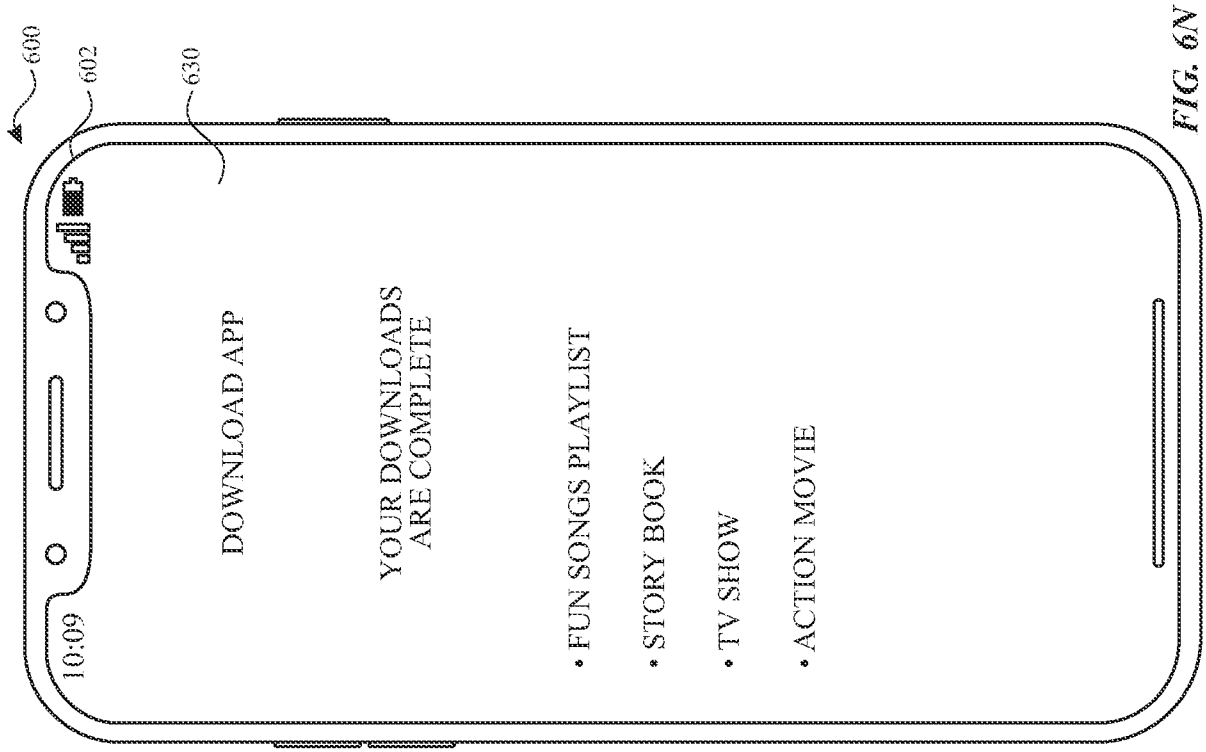
600
602
630
10:09
DOWNLOAD APP
YOUR DOWNLOADS ARE COMPLETE
• FUN SONGS PLAYLIST
• STORY BOOK
• TV SHOW
• ACTION MOVIE

FIG. 6N

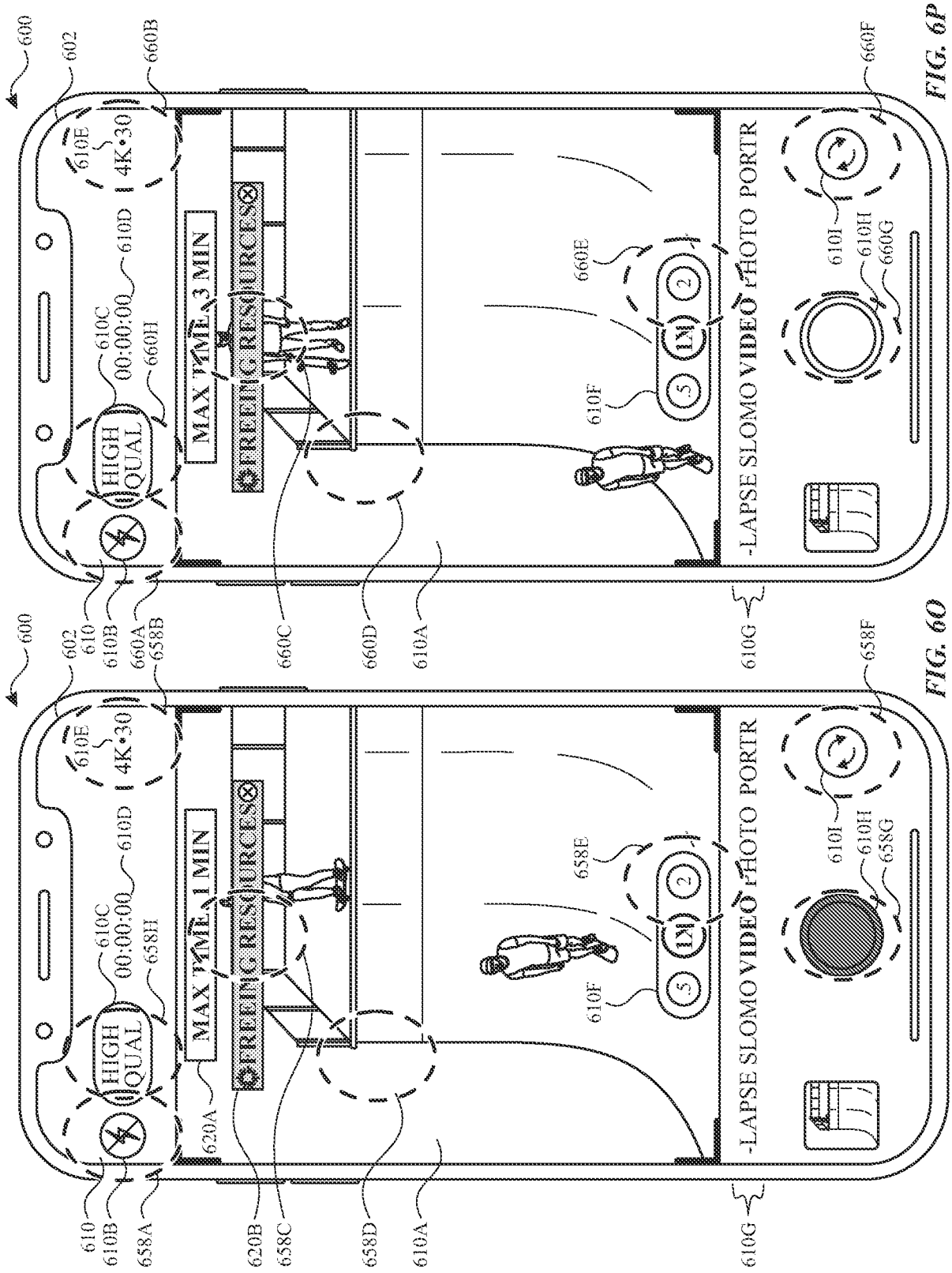
600
602
610
610B
658A
610E
4K•30
610D
610C
00:00:00
658H
HIGH QUAL
MAX TIME 1 MIN
FREEING RESOURCES
620A
620B
658C
658D
610A
658E
610F
610G
-LAPSE SLOMO VIDEO PHOTO PORTR
610I
610H
658G
658F
660B
660A
658B
660C
660D
660E
660H
660G
660F

FIG. 6O

FIG. 6P

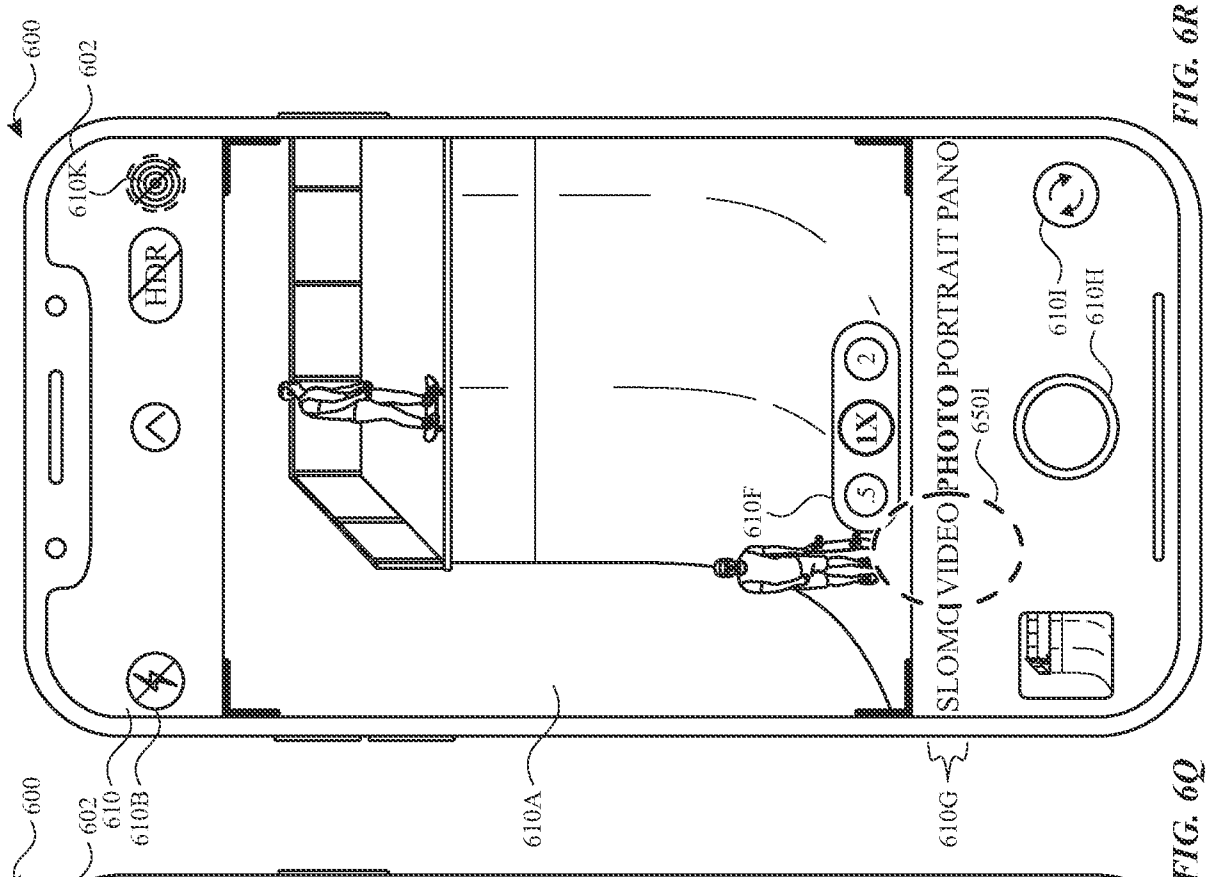
600
602
610K
HDR
610F
5
1X
2
SLOMO VIDEO PHOTO PORTRAIT PANO
650I
610I
610H
610
610B
610A
610G

FIG. 6R

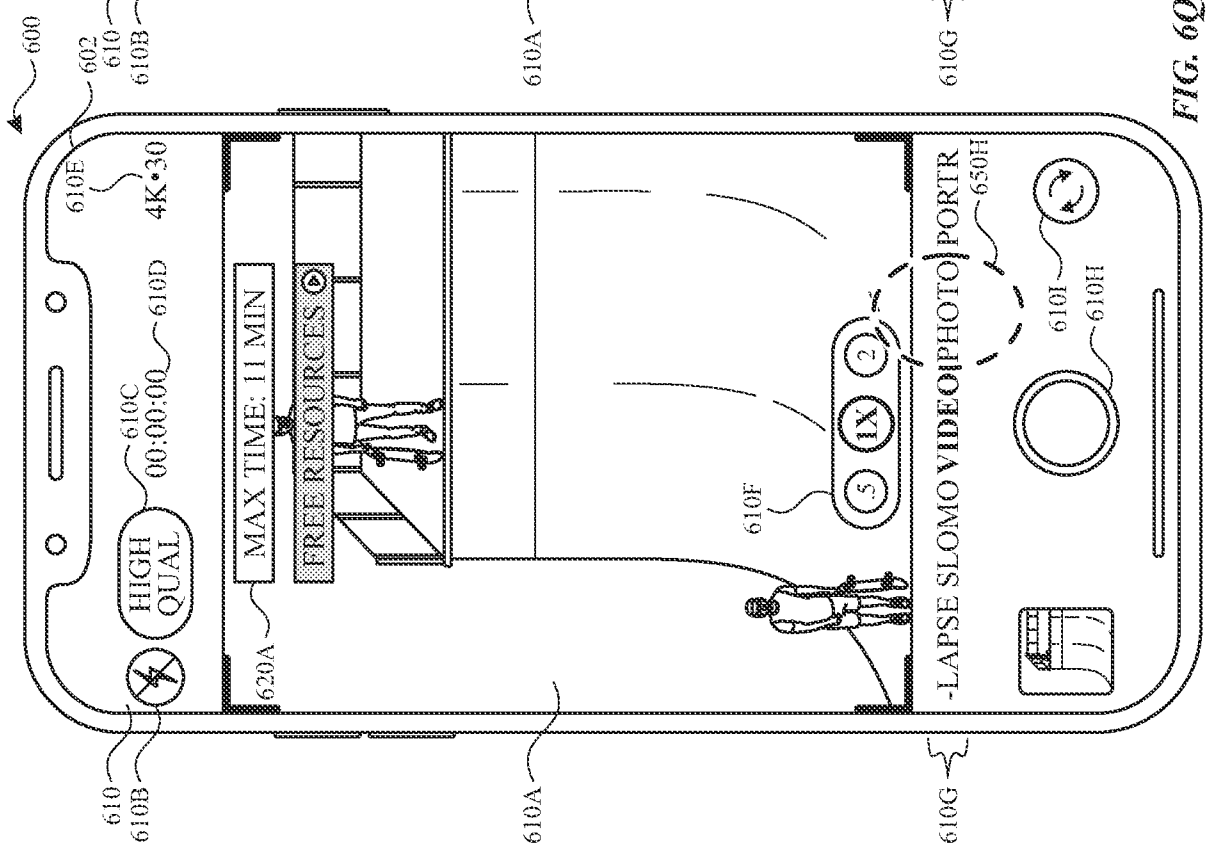
600
602
610E
4K•30
610D
610C
00:00:00
HIGH QUAL
MAX TIME: 11 MIN
FREE RESOURCES
620A
610F
5
1X
2
-LAPSE SLOMO VIDEO PHOTO PORTR
650H
610I
610H
610
610B
610A
610G

FIG. 6Q

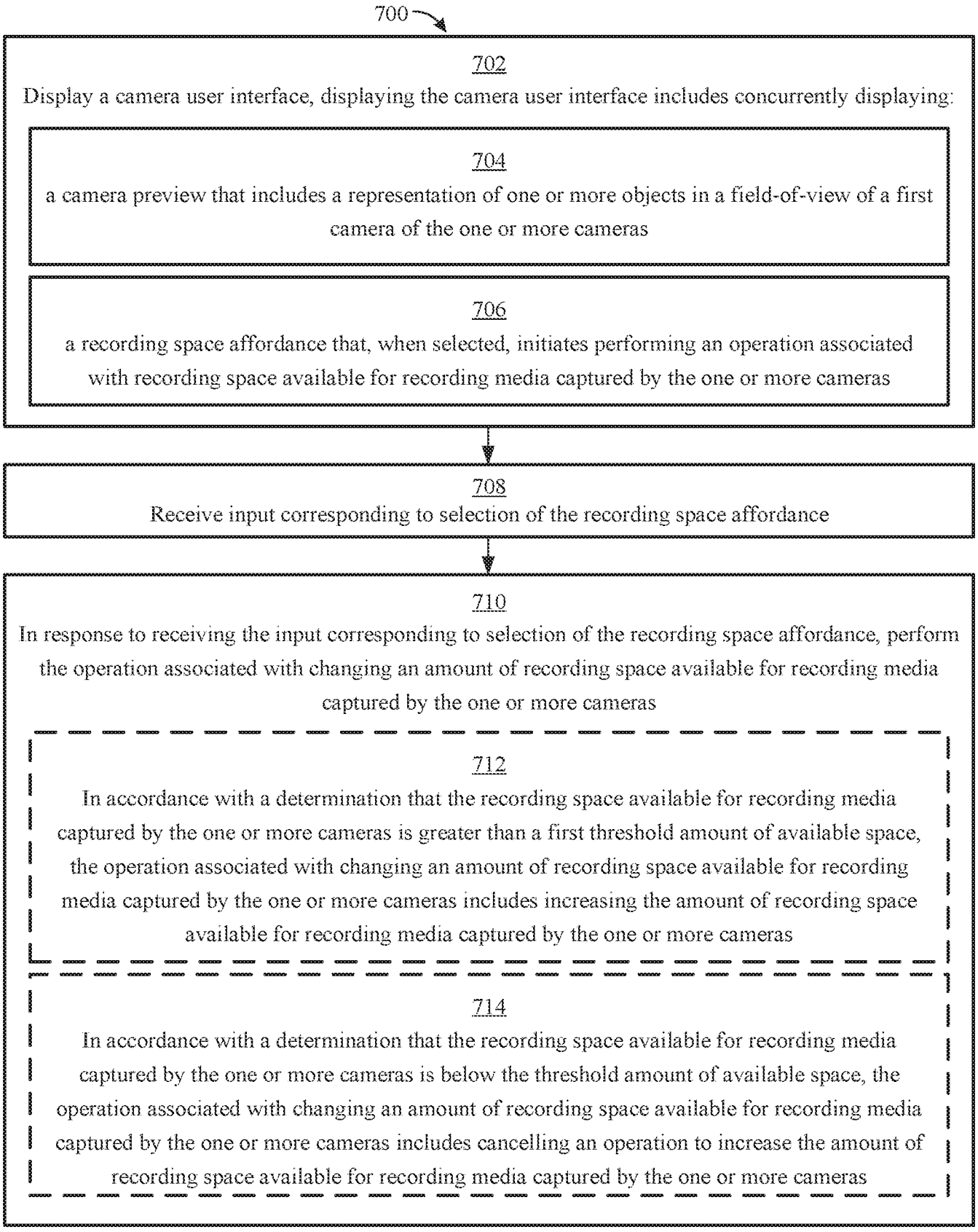
700
702
Display a camera user interface, displaying the camera user interface includes concurrently displaying:
704
a camera preview that includes a representation of one or more objects in a field-of-view of a first camera of the one or more cameras
706
a recording space affordance that, when selected, initiates performing an operation associated with recording space available for recording media captured by the one or more cameras
708
Receive input corresponding to selection of the recording space affordance
710
In response to receiving the input corresponding to selection of the recording space affordance, perform the operation associated with changing an amount of recording space available for recording media captured by the one or more cameras
712
In accordance with a determination that the recording space available for recording media captured by the one or more cameras is greater than a first threshold amount of available space, the operation associated with changing an amount of recording space available for recording media captured by the one or more cameras includes increasing the amount of recording space available for recording media captured by the one or more cameras
714
In accordance with a determination that the recording space available for recording media captured by the one or more cameras is below the threshold amount of available space, the operation associated with changing an amount of recording space available for recording media captured by the one or more cameras includes cancelling an operation to increase the amount of recording space available for recording media captured by the one or more cameras

FIG. 7

INTERNATIONAL SEARCH REPORT

International application No
PCT/US2022/046752

A. CLASSIFICATION OF SUBJECT MATTER
INV. H04N23/62 G06F3/048 H04N23/63 H04N23/667
ADD.

According to International Patent Classification (IPC) or to both national classification and IPC

B. FIELDS SEARCHED

Minimum documentation searched (classification system followed by classification symbols)
H04N G06F

Documentation searched other than minimum documentation to the extent that such documents are included in the fields searched

Electronic data base consulted during the international search (name of data base and, where practicable, search terms used)
EPO-Internal, WPI Data

C. DOCUMENTS CONSIDERED TO BE RELEVANT

Category*	Citation of document, with indication, where appropriate, of the relevant passages	Relevant to claim No.
X	US 2019/215452 A1 (CHEN LING [TW]) 11 July 2019 (2019-07-11)	1-8, 10-12, 18-24, 34-41
Y	the whole document	8,9, 13-17, 25-33

Y	US 2018/144776 A1 (ZHANG LIANG [CN]) 24 May 2018 (2018-05-24)	8,9, 13-17, 25-33
	the whole document	

☐ Further documents are listed in the continuation of Box C.

☒ See patent family annex.

* Special categories of cited documents :

"A" document defining the general state of the art which is not considered to be of particular relevance

"E" earlier application or patent but published on or after the international filing date

"L" document which may throw doubts on priority claim(s) or which is cited to establish the publication date of another citation or other special reason (as specified)

"O" document referring to an oral disclosure, use, exhibition or other means

"P" document published prior to the international filing date but later than the priority date claimed

"T" later document published after the international filing date or priority date and not in conflict with the application but cited to understand the principle or theory underlying the invention

"X" document of particular relevance;; the claimed invention cannot be considered novel or cannot be considered to involve an inventive step when the document is taken alone

"Y" document of particular relevance;; the claimed invention cannot be considered to involve an inventive step when the document is combined with one or more other such documents, such combination being obvious to a person skilled in the art

"&" document member of the same patent family

Date of the actual completion of the international search	Date of mailing of the international search report
26 January 2023	02/02/2023

Name and mailing address of the ISA/	Authorized officer
European Patent Office, P.B. 5818 Patentlaan 2 NL - 2280 HV Rijswijk Tel. (+31-70) 340-2040, Fax: (+31-70) 340-3016	Mao, Pauline

1

INTERNATIONAL SEARCH REPORT

Information on patent family members

International application No
PCT/US2022/046752

Patent document cited in search report	Publication date	Patent family member(s)	Publication date
US 2019215452 A1	11-07-2019	CN 110022429 A	16-07-2019
		TW 201931851 A	01-08-2019
		US 2019215452 A1	11-07-2019
US 2018144776 A1	24-05-2018	CN 108111789 A	01-06-2018
		US 2018144776 A1	24-05-2018